CE TOOLING SOURCE CATALOG

Allow us to quote your tool needs .

Find the best tool for your needs. CE Tooling will offer the best price.

PUNCHES • DIES • SHEAR BLADES

THE CLEVELAND PUNCH & DIE COMPANY

CE TOOLING, Manufacturer & Distributor of Fab Tools and Accessories

+1 702 736-2958 sales@cetooling.com

table of contents

shapes

Common Shapes 10-11

standard punches

Stock Punches 12
Large Punches. 13
Round Punches. 16-17
Oblong Punches. 20-21
Square Punches. 24
Hexagon Punches 25
Straight Shank Punches 28
Special Purpose Punches 32
Punch Stems 36
Urethane Punch Strippers 37
Punch Ends/Die Profiles 43

standard dies

Stock Dies 14
Large Dies. 15
Round Dies. 18-19
Oblong Dies. 22-23
Square Dies. 24
Hexagon Dies 25
Offset Dies- Style 128 26
Special Purpose Dies 27
Die Holders 40-41

misc.

Special Purpose Tooling-Punches & Dies
Corner Radius Tooling, Stock Picket Tooling 29
Keyhole Tooling, Countersink Tooling 30
Lattice Bar Tooling, Standard Electrical Push-Button
Tooling, Double Step Punch 31
Center Punches, Stock Transfer Punches,
Taper Shank Punches 33
Metal Culvert Tooling-Punches & Dies
Metal Culvert Punches, Hammers, Dies & Anvil. 34

additional reference information

additional

OSHA WARNING
It is the user's responsibility that the machine and **tooling** be set up and used in accordance with local and national OSHA Laws and ANSI B11.5 standards for safety.
Do not permit unqualified personnel to setup or operate the machine. Extreme care should be used at all times.

Buffalo™
Controlled Automation™
Edwards™
Franklin Mfg.™
Geka™
Hill Acme™
Kingsland™
Mubea™
Peddinghaus™
Piranha™
Scotchman™
Spartan™
W.A. Whitney™

For additional tooling information on the above manufacturers, contact one of our Green Team Customer Service representatives

ordering

When ordering:

- Please specify make and model number of your ironworker
- Type of material being punched and thickness
- Punches - quantity, figure number, shape and size
- Dies - quantity, figure number, shape and size

(If you wish, provide us with the type of material and thickness and we will supply the proper clearance.)

Returns
Returned tooling will not be accepted without prior authorization. No credit issued on used or damaged tooling. Special tooling can not be returned. Returned tooling must be shipped prepaid. Restocking charge is 25% of list price.

Shortages
All claims must be made within ten days of invoice date.

Terms
F.O.B. Ravenna, Ohio
Net 30 days

more holes per dollar

The life of punches and dies can be extended, productivity increased, downtime reduced and more holes per dollar obtained by paying close attention to these basic elements:

- Alignment
- Coupling Nuts (or other punch holders)
- Punch Stems
- Strippers
- Lubrication (Punch-Easy)
- Clearance
- Material Hardness
- Material Thickness
- Shape of hole being punched
- A well trained operator

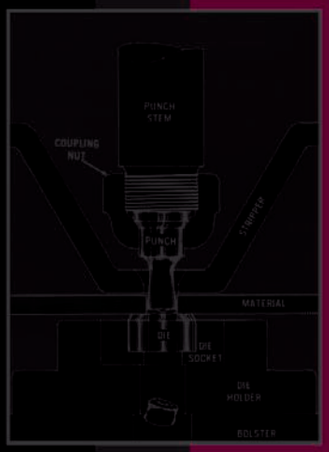

For additional tooling information on the above items, contact one of our Green Team Customer Service representatives at 1-800-451-4342 for a copy of our article "Extending the Life of Ironworker Punches and Dies."

STOCK PUNCHES & DIES ARE SHIPPED THE SAME DAY ORDERED!

COMMON SHAPES

X - 1
Ellipse

X - 2
Rectangle

X - 3
Square

X - 4
Round

X - 5
Oblong

X - 6
Oblong Center Radius

X - 7
Hexagon

X - 8
Lattice Bar

X - 9
Single D

X - 10
Keyhole

X - 11
Keyhole with End Radius

X - 12
Double Keyhole with End Radii

X - 13
Teardrop

X - 14
Hotdog

X - 15
Elongated D

X - 16
Gumdrop

X - 17
Corner Radius

X - 18
RS - 232

X - 19
RS - 232 with slots

X - 20
Jail Bar

COMMON SHAPES

X - 21
Pentagon

X - 22
Heptagon

X - 23
Octagon

X - 24
Decagon

X - 25
Rhombus

X - 26
Rhomboid

X - 27
Trapezoid

X - 28
Trapezium

X - 29
Equilateral Triangle

X - 30
Isosceles Triangle

X - 31
Right Triangle

X - 32
Scalene Triangle

X - 33
8 - Point Star

X - 34
L - Shape

X - 35
U - Shape

X - 36
I - Shape

X - 37
Cutler - Hammer™

X - 38
General Electric™

X - 39
Square D™, Westinghouse™

X - 40
Allen Bradley™, Clark™, General Electric™, Westinghouse™

STOCK PUNCHES

Dimensions & Specifications

These pages illustrate our "standard" punches. Made to order sizes can be shipped in as little as 24 hours. Refer to our **Cross Reference Catalog** for the proper tooling to fit your machine.

STOCK PUNCHES & DIES ARE SHIPPED THE SAME DAY ORDERED!

F-2
IN STOCK

F-3
IN STOCK

F-4
IN STOCK

F-6
IN STOCK

F-7
IN STOCK

F-9
IN STOCK

F-10
IN STOCK

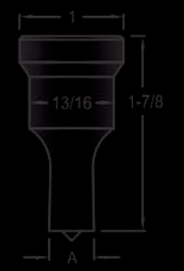

F-11
IN STOCK

F-12
IN STOCK

F-15
IN STOCK

F-16
IN STOCK

F-17
IN STOCK

F-19
IN STOCK

F-19L
IN STOCK

F-20
IN STOCK

F-21
IN STOCK

F-23
IN STOCK

F-26
IN STOCK

F-26S
IN STOCK

LARGE PUNCHES

F-28*

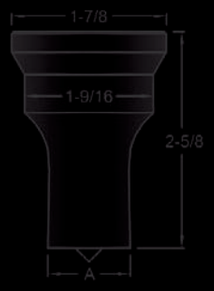

F-29*

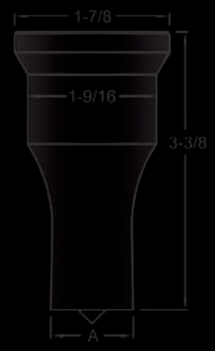

F-30*

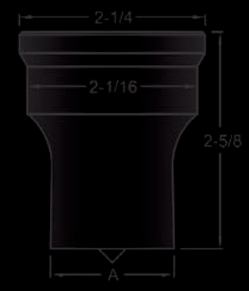

F-31*

C-48*

C-50

IN STOCK

C-51 (F-32)*

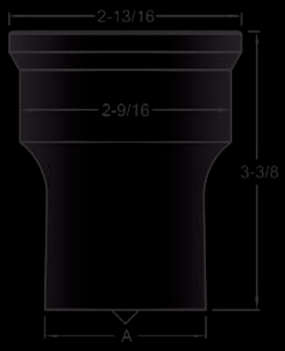

C-52*

C-53*

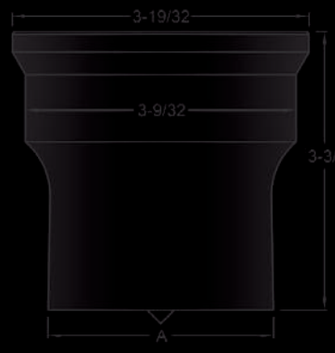

C-54*

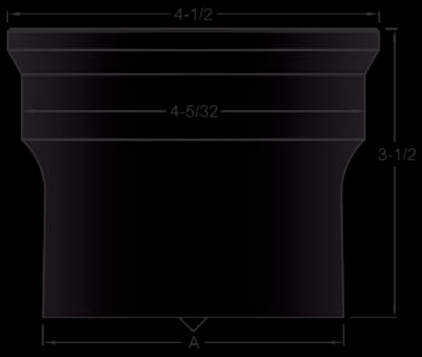

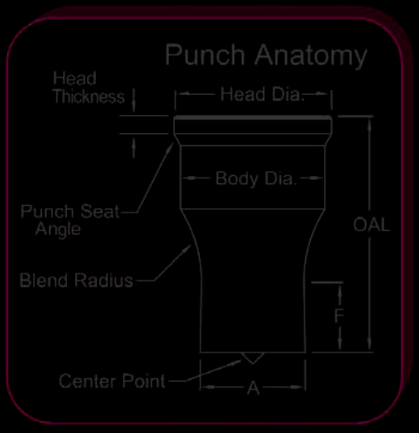

GREEN TEAM TIP:
The material thickness should not exceed the punch size (A Dim.).

STOCK DIES

Dimensions and Specifications

These pages illustrate our "standard" dies that are guaranteed to fit the bore of your die holder. Refer to our **Cross Reference Catalog** for the proper tooling to fit your machine.

STOCK PUNCHES & DIES ARE SHIPPED THE SAME DAY ORDERED!

****MADE TO ORDER SIZES CAN BE SHIPPED IN AS LITTLE AS 24 HOURS!***

F-122*

F-123*

F-41

IN STOCK

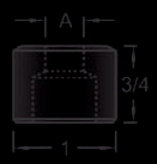

F-42

IN STOCK

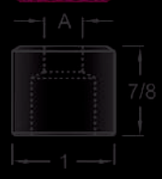

F-124*

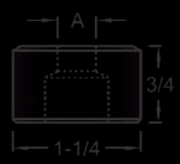

F-43

IN STOCK

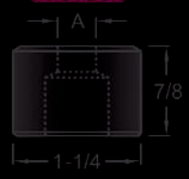

F-45

IN STOCK

F-46

IN STOCK

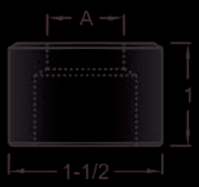

F-125*

F-52

IN STOCK

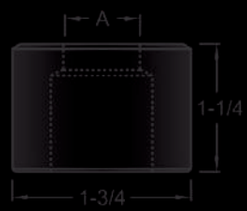

F-55

IN STOCK

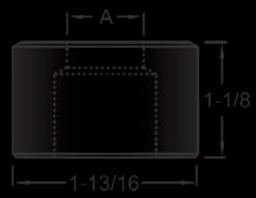

F-59

IN STOCK

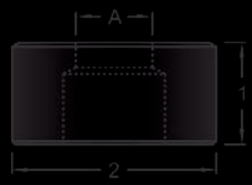

F-60

IN STOCK

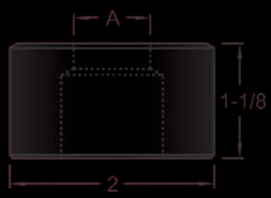

F-130*

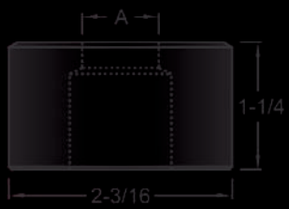

F-62

IN STOCK

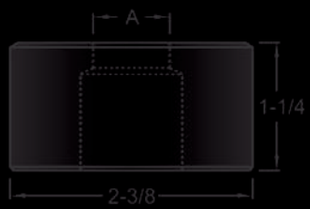

F-62S

IN STOCK

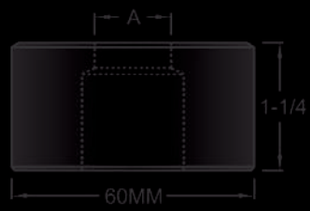

F-65

IN STOCK

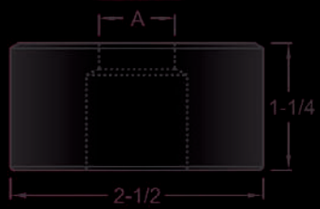

C-88*

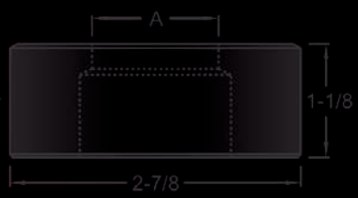

C-89

IN STOCK

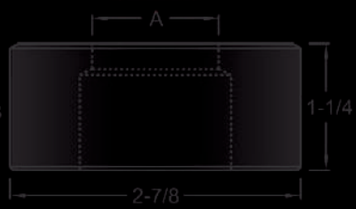

C-90*

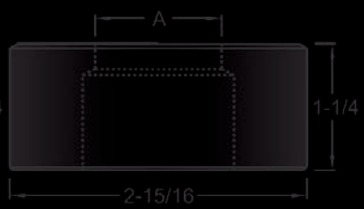

LARGE DIES

F-71*

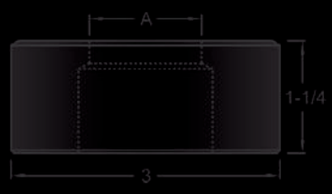

C-91MM

IN STOCK

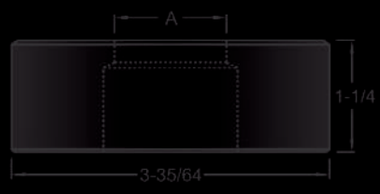

C-92*

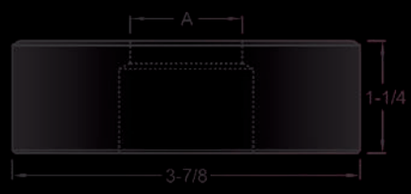

F-72*

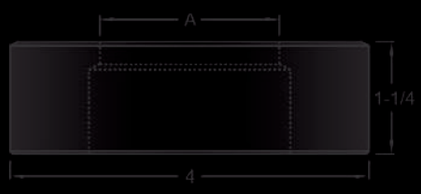

C-94*

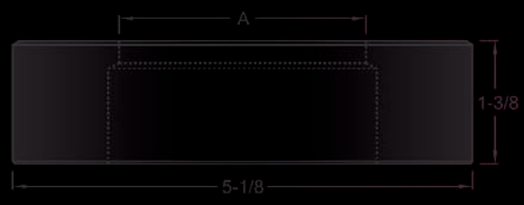

F-73*

C-96*

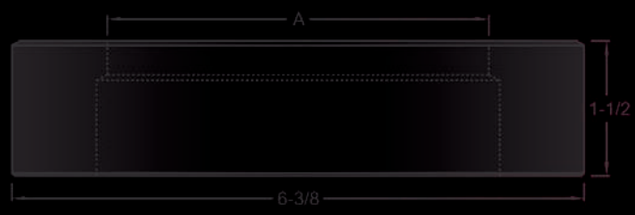

F-74*

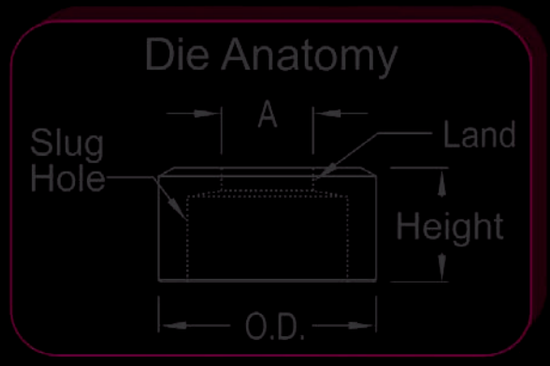

GREEN TEAM TIP:
Periodically check the inside seat of your die holder for metal chips & excessive wear.

ROUND PUNCHES

The following table lists our stock round punches. Refer to our **Cross Reference Catalog** for stock punches & dies and recommended manufactures' tooling.

STOCK PUNCHES & DIES ARE SHIPPED THE SAME DAY ORDERED!

MADE TO ORDER SIZES CAN BE SHIPPED IN AS LITTLE AS 24 HOURS!

● *Represents stock round sizes*

	FIGURE NUMBER										
Size	**2**	**3**	**4**	**6**	**7**	**9**	**10**	**11**	**12**	**15**	**16**
1/8	●	●	●	●	●	●			●		●
5/32	●	●	●	●	●	●			●		●
3/16	●	●	●	●	●	●	●	●	●		●
7/32	●	●	●	●	●	●	●	●	●	●	●
1/4	●	●	●	●	●	●	●	●	●	●	●
9/32	●	●	●	●	●	●	●	●	●	●	●
5/16	●	●	●	●	●	●	●	●	●	●	●
11/32	●	●	●	●	●	●	●	●	●	●	●
3/8	●	●	●	●	●	●	●	●	●	●	●
13/32	●	●	●	●	●	●	●	●	●	●	●
7/16	●	●	●	●	●	●	●	●	●	●	●
15/32		●	●	●	●	●	●	●	●	●	●
1/2		●	●	●	●	●	●	●	●	●	●
17/32		●	●	●	●	●	●	●	●	●	●
9/16		●	●	●	●	●	●	●	●	●	●
19/32		●			●	●	●	●	●	●	●
5/8					●	●	●	●	●	●	●
21/32					●	●	●	●	●	●	●
11/16					●	●	●	●	●	●	●
23/32					●	●	●	●	●	●	●
3/4					●	●	●	●	●	●	●
25/32					●	●	●		●	●	●
13/16					●	●	●		●	●	●
27/32									●	●	●
7/8									●	●	●
29/32									●	●	●
15/16									●	●	●
31/32									●	●	●
1									●	●	●
1-1/32									●	●	●
1-1/16									●	●	●
1-3/32											
1-1/8											●
1-5/32											
1-3/16											
1-7/32											
1-1/4											
1-9/32											
1-5/16											
1-11/32											
1-3/8											
1-13/32											
1-7/16											
1-15/32											
1-1/2											
1-17/32											
1-9/16											

GREEN TEAM TIP:
*Punches last longer when used with a punch lubricant. For maximum punch life, use Cleveland Punch & Die's patented punch lubricant - **Punch Easy**.*

ROUND PUNCHES

● *Represents stock round sizes*

	FIGURE NUMBER							
Size	17	19	19L	20	21	23	26	26S
1/8				●				
5/32				●			●	
3/16	●	●		●	●		●	
7/32	●	●		●	●		●	
1/4	●	●		●	●	●	●	
9/32	●	●		●	●	●	●	
5/16	●	●	●	●	●	●	●	
11/32	●	●	●	●	●	●	●	
3/8	●	●	●	●	●	●	●	
13/32	●	●	●	●	●	●	●	
7/16	●	●	●	●	●	●	●	
15/32	●	●	●	●	●	●	●	
1/2	●	●	●	●	●	●	●	
17/32	●	●	●	●	●	●	●	
9/16	●	●	●	●	●	●	●	
19/32	●	●	●	●	●	●	●	
5/8	●	●	●	●	●	●	●	
21/32	●	●	●	●	●	●	●	
11/16	●	●	●	●	●	●	●	
23/32	●	●	●	●	●	●	●	
3/4	●	●	●	●	●	●	●	
25/32	●	●	●	●	●	●	●	
13/16	●	●	●	●	●	●	●	
27/32	●	●	●	●	●	●	●	
7/8	●	●	●	●	●	●	●	
29/32	●	●	●	●	●	●	●	
15/16	●	●	●	●	●	●	●	
31/32	●	●	●	●	●	●	●	
1	●	●	●	●	●	●	●	
1-1/32	●	●	●	●	●	●	●	
1-1/16	●	●	●	●	●	●	●	
1-3/32				●	●	●	●	
1-1/8	●	●		●	●	●	●	
1-5/32				●	●	●	●	
1-3/16				●	●	●	●	
1-7/32				●	●	●	●	
1-1/4				●	●	●	●	●
1-9/32						●	●	●
1-5/16						●	●	●
1-11/32							●	●
1-3/8							●	●
1-13/32							●	●
1-7/16							●	●
1-15/32							●	●
1-1/2							●	●
1-17/32							●	●
1-9/16							●	●

Size	C-50
1-1/16	●
1-1/8	●
1-3/16	●
1-1/4	●
1-5/16	●
1-3/8	●
1-7/16	●
1-1/2	●
1-9/16	●
1-5/8	●
1-11/16	●
1-3/4	●
1-13/16	●
1-7/8	●
1-15/16	●
2	●
2-1/16	●
2-1/8	●
2-3/16	●
2-1/4	●

Crowned Edge with Center

IN STOCK

Stock punches are provided with a crowned edge with center. Refer to page 43 for a detailed listing of other punch end options.

ROUND DIES

The following table lists our stock round dies. Refer to our **Cross Reference Catalog** for the proper tooling to fit your machine.

STOCK PUNCHES & DIES ARE SHIPPED THE SAME DAY ORDERED!

MADE TO ORDER SIZES CAN BE SHIPPED IN AS LITTLE AS 24 HOURS!

● *Represents stock round sizes*

	FIGURE NUMBER												
Size	41	42	43	45	46	52	55	59	60	62	62S	65	C-89
5/32	●	●	●	●	●		●	●	●				
3/16	●	●	●	●	●	●	●	●	●	●			
7/32	●	●	●	●	●	●	●	●	●	●		●	
1/4	●	●	●	●	●	●	●	●	●	●		●	
9/32	●	●	●	●	●	●	●	●	●	●		●	
5/16	●	●	●	●	●	●	●	●	●	●		●	
11/32	●	●	●	●	●	●	●	●	●	●		●	
3/8	●	●	●	●	●	●	●	●	●	●		●	
13/32	●	●	●	●	●	●	●	●	●	●		●	
7/16	●	●	●	●	●	●	●	●	●	●		●	
15/32	●	●	●	●	●	●	●	●	●	●		●	
1/2	●	●	●	●	●	●	●	●	●	●		●	
17/32	●	●	●	●	●	●	●	●	●	●		●	
9/16	●	●	●	●	●	●	●	●	●	●		●	
19/32	●	●	●	●	●	●	●	●	●	●		●	
5/8	●	●	●	●	●	●	●	●	●	●		●	
21/32	●	●	●	●	●	●	●	●	●	●		●	
11/16	●	●	●	●	●	●	●	●	●	●		●	
23/32	●	●	●	●	●	●	●	●	●	●		●	
3/4	●	●	●	●	●	●	●	●	●	●		●	●
25/32		●	●	●	●	●	●	●	●	●		●	●
13/16			●	●	●	●	●	●	●	●		●	●
27/32			●	●	●	●	●	●	●	●		●	●
7/8			●	●	●	●	●	●	●	●		●	●
29/32			●	●	●	●	●	●	●	●		●	●
15/16			●	●	●	●	●	●	●	●		●	●
31/32			●	●	●	●	●	●	●	●		●	●
1			●	●	●	●	●	●	●	●		●	●
1-1/32				●	●	●	●	●	●	●		●	●
1-1/16				●	●	●	●	●	●	●		●	●
1-3/32				●	●	●	●	●	●	●		●	●
1-1/8				●	●	●	●	●	●	●		●	●
1-5/32					●	●	●	●	●	●		●	●
1-3/16					●	●	●	●	●	●		●	●
1-7/32						●	●	●	●	●		●	●
1-1/4						●	●	●	●	●		●	●
1-9/32							●	●	●	●	●	●	●
1-5/16							●	●	●	●	●	●	●
1-11/32							●	●	●	●	●	●	●
1-3/8							●	●	●	●	●	●	●
1-13/32								●	●	●	●	●	●
1-7/16								●	●	●	●	●	●
1-15/32									●	●	●	●	●
1-1/2									●	●	●	●	●
1-17/32									●	●	●	●	●
1-9/16										●	●	●	●
1-19/32										●	●	●	●
1-5/8										●	●	●	●
1-11/16												●	●

● *Represents stock round sizes*

Size	C-91MM
1-3/32	●
1-1/8	●
1-5/32	●
1-3/16	●
1-7/32	●
1-1/4	●
1-9/32	●
1-5/16	●
1-11/32	●
1-3/8	●
1-13/32	●
1-7/16	●
1-15/32	●
1-1/2	●
1-17/32	●
1-9/16	●
1-19/32	●
1-5/8	●
1-21/32	●
1-11/16	●
1-23/32	●
1-3/4	●
1-25/32	●
1-13/16	●
1-27/32	●
1-7/8	●
1-29/32	●
1-15/16	●
1-31/32	●
2	●
2-1/32	●
2-1/16	●
2-3/32	●
2-1/8	●
2-5/32	●
2-3/16	●
2-7/32	●
2-1/4	●
2-9/32	●
2-5/16	●

PLEASE NOTE:

We stock 1/32" & 1/16" clearance die sizes. Other made to order die sizes such as clearances recommended for gauge stock, can be shipped in as little as 24 hours.

FOR A-36 AND MILD STEEL PLATE:

1/4" up to 1/2"	1/32" clearance
1/2" up to 3/4"	1/16" clearance
3/4" up to 1"	3/32" clearance
1" and over	1/8" clearance

GREEN TEAM TIP:
Good results are obtained by using the following charts to determine die clearance.

FOR GAUGE STOCK:

Size	Approximate Thickness	Clearance Added to Punch Size
30	.0120	Slip fit
29	.0135	Slip fit
28	.0149	Slip fit
27	.0164	Slip fit
26	.0179	Slip fit
25	.0209	.002
24	.0239	.002
23	.0269	.002
22	.0299	.003
21	.0329	.003
20	.0359	.003
19	.0418	.003
18	.0478	.005
17	.0538	.005
16	.0598	.005
15	.0673	.007
14	.0747	.007
13	.0897	.010
12	.1046	.010
11	.1196	.010
10	.1345	1/64
9	.1494	1/64
8	.1644	1/64
7	.1793	1/64

MISCELLANEOUS CLEARANCE FOR OTHER MATERIALS

RECOMMENDED CLEARANCE FOR PUNCHING

Clearance Added to Punch Size (% of Material Thickness)

Material	Best	Minimum	Maximum
Aluminum, Soft	10	5	15
Brass, 1/2 Hard	11	6	16
Copper, 1/2 Hard	12	8	16
Steel, 0.50% C	18	12	24
Stainless Steel	18	12	24

OSHA WARNING

It is the user's responsibility that the machine and **tooling** be set up and used in accordance with local and national OSHA Laws and ANSI B11.5 standards for safety.

Do not permit unqualified personnel to setup or operate the machine. Extreme care should be used at all times.

EFFECTS OF TOO MUCH OR TOO LITTLE CLEARANCE

ROUND DIES

OBLONG PUNCHES

The following table lists our stock oblong punches. Refer to our **Cross Reference Catalog** for the proper tooling to fit your machine.

STOCK PUNCHES & DIES ARE SHIPPED THE SAME DAY ORDERED!

MADE TO ORDER SIZES CAN BE SHIPPED IN AS LITTLE AS 24 HOURS!

Represents stock oblong sizes

	FIGURE NUMBER					FIGURE NUMBER			
Size	12	16	20	26	Size	12	16	20	26
3/16 x 3/4	●	●			7/16 x 9/16	●	●	●	●
3/16 x 1	●	●	●	●	7/16 x 3/4	●	●	●	●
7/32 x 7/16	●	●	●		7/16 x 7/8	●	●	●	●
7/32 x 1	●	●	●	●	7/16 x 1	●	●	●	●
1/4 x 1/2	●	●	●	●	7/16 x 1-1/16	●	●	●	●
1/4 x 3/4	●	●	●	●	7/16 x 1-1/4			●	●
1/4 x 1	●	●	●	●	7/16 x 1-1/2				●
9/32 x 9/16	●	●	●	●	15/32 x 1	●	●	●	●
9/32 x 3/4	●	●	●	●	1/2 x 3/4	●	●	●	●
9/32 x 1	●	●	●	●	1/2 x 1	●	●	●	●
5/16 x 1/2	●	●	●	●	1/2 x 1-1/16		●	●	●
5/16 x 5/8	●	●	●	●	1/2 x 1-1/4			●	●
5/16 x 3/4	●	●	●	●	1/2 x 1-1/2				●
5/16 x 1	●	●	●	●	17/32 x 1	●	●	●	●
5/16 x 1-1/16		●	●	●	17/32 x 1-1/4			●	●
5/16 x 1-1/4			●	●	17/32 x 1-1/2				●
5/16 x 1-1/2				●	9/16 x 3/4	●	●	●	●
11/32 x 11/16	●	●	●	●	9/16 x 1	●	●	●	●
11/32 x 1	●	●	●	●	9/16 x 1-1/16		●	●	●
3/8 x 1/2	●	●	●	●	9/16 x 1-1/8		●	●	●
3/8 x 3/4	●	●	●	●	9/16 x 1-1/4			●	●
3/8 x 1	●	●	●	●	9/16 x 1-1/2				●
3/8 x 1-1/4			●	●	5/8 x 1	●	●	●	●
3/8 x 1-1/2				●	5/8 x 1-1/4			●	●
13/32 x 13/16	●	●	●	●	5/8 x 1-1/2				●
13/32 x 1	●	●	●	●	11/16 x 1	●	●	●	●
13/32 x 1-1/4			●	●	11/16 x 1-1/16		●	●	●

GREEN TEAM TIP:
Punch sizes larger than body diameter may require special coupling nut.

OBLONG PUNCHES

Represents stock oblong sizes

Size	FIGURE NUMBER 12	16	20	26
11/16 x 1-1/8		●	●	●
11/16 x 1-1/4			●	●
11/16 x 1-1/2				●
3/4 x 1	●	●	●	●
3/4 x 1-1/4			●	●
3/4 x 1-1/2				●
13/16 x 1	●	●	●	●
13/16 x 1-1/16		●	●	●
13/16 x 1-1/8		●	●	●
13/16 x 1-1/4			●	●
13/16 x 1-1/2				●
7/8 x 1-1/4			●	●
7/8 x 1-1/2				●
15/16 x 1-1/16		●	●	●
15/16 x 1-1/8		●	●	●
15/16 x 1-1/4			●	●
15/16 x 1-1/2				●
15/16 x 1-9/16				●
1 x 1-1/4			●	●
1 x 1-1/2				●
1 x 1-9/16				●
1-1/16 x 1-1/4			●	●
1-1/16 x 1-5/16				●
1-1/16 x 1-1/2				●
1-1/16 x 1-9/16				●
1-1/8 x 1-1/2				●

Keyways in Head of Punch

Oblong punches are stocked without keyways in the head. Keyways can be furnished on request.

SINGLE

CROSSED

V-GROOVE

GREEN TEAM TIP:
Punch sizes larger than body diameter may require special coupling nut.

OBLONG DIES

The following table lists our stock oblong dies. Refer to our **Cross Reference Catalog** for the proper tooling to fit your machine.

STOCK PUNCHES & DIES ARE SHIPPED THE SAME DAY ORDERED!

MADE TO ORDER SIZES CAN BE SHIPPED IN AS LITTLE AS 24 HOURS!

Represents stock oblong sizes

	FIGURE NUMBER				
Size	46	55	59	60	62
7/32 x 25/32	●	●			
7/32 x 1-1/32	●	●	●		●
15/64 x 29/64	●	●	●		
1/4 x 15/32	●	●	●		
1/4 x 1-1/32	●	●	●		●
9/32 x 17/32	●	●	●		●
9/32 x 25/32	●	●	●		●
9/32 x 1-1/32	●	●	●		●
5/16 x 19/32	●	●	●		●
5/16 x 25/32	●	●	●		●
5/16 x 1-1/32	●	●	●	●	●
11/32 x 17/32	●	●	●		●
11/32 x 21/32	●	●	●		●
11/32 x 25/32	●	●	●	●	●
11/32 x 1-1/32	●	●	●	●	●
11/32 x 1-3/32		●	●		●
11/32 x 1-9/32			●	●	●
11/32 x 1-17/32					●
3/8 x 23/32	●	●	●		●
3/8 x 1-1/32	●	●	●	●	●
3/8 x 1-5/16			●		●
13/32 x 17/32	●	●	●	●	●
13/32 x 25/32	●	●	●		●
13/32 x 1-1/32	●	●	●	●	●
13/32 x 1-9/32			●	●	●
13/32 x 1-17/32					●
7/16 x 27/32	●	●	●		●
7/16 x 1-1/32	●	●	●	●	●
7/16 x 1-9/32			●	●	●
7/16 x 1-5/16					●
15/32 x 19/32	●	●	●	●	●

	FIGURE NUMBER				
Size	46	55	59	60	62
15/32 x 25/32	●	●	●	●	●
15/32 x 29/32	●	●	●	●	●
15/32 x 1-1/32	●	●	●	●	●
15/32 x 1-3/32	●	●	●	●	●
15/32 x 1-9/32			●	●	●
15/32 x 1-17/32				●	●
1/2 x 1-1/32	●	●	●	●	●
1/2 x 1-1/16		●	●		●
1/2 x 1-5/16			●		●
17/32 x 25/32	●	●	●	●	●
17/32 x 1-1/32	●	●	●	●	●
17/32 x 1-3/32		●	●		●
17/32 x 1-9/32			●	●	●
17/32 x 1-17/32				●	●
9/16 x 13/16		●	●		●
9/16 x 1-1/32	●	●	●	●	●
9/16 x 1-1/16	●	●	●	●	●
9/16 x 1-1/8		●	●	●	●
9/16 x 1-3/16		●	●		●
9/16 x 1-9/32			●	●	●
9/16 x 1-5/16			●		●
9/16 x 1-17/32				●	●
9/16 x 1-9/16					●
19/32 x 25/32	●	●	●	●	●
19/32 x 1-1/32	●	●	●	●	●
19/32 x 1-3/32		●	●	●	●
19/32 x 1-5/32		●	●		●
19/32 x 1-9/32			●	●	●
19/32 x 1-17/32				●	●
5/8 x 13/16	●	●	●	●	●
5/8 x 1-1/16	●	●	●	●	●

OBLONG DIES

Represents stock oblong sizes

Whistle Notch Locators

Oblong dies are stocked without locators.
Locators can be furnished on request.

Size	FIGURE NUMBER 46	55	59	60	62
5/8 x 1-1/8		●	●	●	●
5/8 x 1-3/16		●	●		●
5/8 x 1-5/16			●	●	●
5/8 x 1-9/16				●	●
21/32 x 1-1/32	●	●	●	●	●
21/32 x 1-9/32			●	●	●
21/32 x 1-17/32					●
11/16 x 1-1/16	●	●	●	●	●
11/16 x 1-5/16			●	●	●
11/16 x 1-9/16				●	●
23/32 x 1-1/32	●	●	●	●	●
23/32 x 1-3/32		●	●	●	●
23/32 x 1-5/32		●	●		●
23/32 x 1-9/32			●	●	●
23/32 x 1-17/32				●	●
3/4 x 1-1/16	●	●	●	●	●
3/4 x 1-1/8		●	●	●	●
3/4 x 1-3/16		●	●		●
3/4 x 1-5/16			●	●	●
3/4 x 1-9/16				●	●
25/32 x 1-1/32	●	●	●	●	●
25/32 x 1-9/32			●	●	●
25/32 x 1-17/32					●
13/16 x 1-1/16	●	●	●	●	●
13/16 x 1-5/16			●	●	●
13/16 x 1-9/16				●	●
27/32 x 1-1/32	●	●	●	●	●
27/32 x 1-3/32		●	●	●	●
27/32 x 1-5/32		●	●		●
27/32 x 1-9/32			●	●	●
27/32 x 1-17/32				●	●
7/8 x 1-1/16	●	●	●	●	●

Size	FIGURE NUMBER 46	55	59	60	62
7/8 x 1-1/8		●	●	●	●
7/8 x 1-3/16		●	●		●
7/8 x 1-5/16			●	●	●
7/8 x 1-9/16				●	●
29/32 x 1-9/32			●	●	●
29/32 x 1-17/32				●	●
15/16 x 1-5/16			●	●	●
15/16 x 1-9/16				●	●
31/32 x 1-3/32		●	●	●	●
31/32 x 1-5/32		●	●		●
31/32 x 1-9/32			●	●	●
31/32 x 1-17/32				●	●
1 x 1-1/8		●	●	●	●
1 x 1-3/16		●	●		●
1 x 1-5/16			●	●	●
1 x 1-9/16				●	●
1 x 1-5/8					●
1-1/32 x 1-9/32			●	●	●
1-1/32 x 1-17/32					●
1-1/32 x 1-19/32					●
1-1/16 x 1-5/16			●	●	●
1-1/16 x 1-9/16					●
1-1/16 x 1-5/8					●
1-3/32 x 1-9/32			●		●
1-3/32 x 1-11/32					●
1-3/32 x 1-17/32					●
1-1/8 x 1-5/16			●		●
1-1/8 x 1-3/8					●
1-1/8 x 1-9/16					●
1-1/8 x 1-5/8					●
1-5/32 x 1-17/32					●
1-3/16 x 1-9/16					●

SQ. PUNCHES & DIES

The following table lists our stock square punches and dies. Refer to our **Cross Reference Catalog** for the proper tooling to fit your machine.

STOCK PUNCHES & DIES ARE SHIPPED THE SAME DAY ORDERED!

MADE TO ORDER SIZES CAN BE SHIPPED IN AS LITTLE AS 24 HOURS!

Keyways in Head of Punch

Square punches are stocked without keyways in the head. Keyways can be furnished on request.

Square dies are stocked without locators. Locators can be furnished on request.

STOCK SQUARE PUNCHES

■ *Represents stock square sizes*

	FIGURE NUMBER			
Size	**12**	**16**	**20**	**26**
7/32	■	■	■	
1/4	■	■	■	
9/32	■	■	■	
5/16	■	■	■	■
11/32	■	■	■	■
3/8	■	■	■	■
13/32	■	■	■	■
7/16	■	■	■	■
15/32	■	■	■	■
1/2	■	■	■	■
17/32	■	■	■	■
9/16	■	■	■	■
19/32	■	■	■	■
5/8	■	■	■	■
21/32	■	■	■	■
11/16	■	■	■	■
23/32	■	■	■	■
3/4	■	■	■	■
25/32	■	■	■	■
13/16	■	■	■	■
7/8			■	■
15/16				■
1				■
1-1/16				■

GREEN TEAM TIP:
Punch sizes larger than body diameter may require special coupling nut.

STOCK SQUARE DIES

■ *Represents stock square sizes*

	FIGURE NUMBER					
Size	**46**	**55**	**59**	**60**	**62**	**65**
1/4	■	■	■			
9/32	■	■	■	■		
5/16	■	■	■	■		
11/32	■	■	■	■	■	
3/8	■	■	■	■	■	
13/32	■	■	■	■	■	
7/16	■	■	■	■	■	
15/32	■	■	■	■	■	■
1/2	■	■	■	■	■	■
17/32	■	■	■	■	■	
9/16	■	■	■	■	■	■
19/32	■	■	■	■	■	
5/8	■	■	■	■	■	■
21/32	■	■	■	■	■	
11/16	■	■	■	■	■	■
23/32	■	■	■	■	■	
3/4	■	■	■	■	■	■
25/32	■	■	■	■	■	
13/16	■	■	■	■	■	■
27/32	■	■	■	■	■	
7/8		■	■	■	■	■
29/32		■	■	■	■	
15/16		■	■	■	■	■
31/32				■	■	
1			■	■	■	■
1-1/32				■	■	
1-1/16			■	■	■	■
1-3/32				■	■	■
1-1/8			■	■	■	■

DIAGONAL
(POINT TO POINT)

GREEN TEAM TIP:
You must check the diagonal of your square sizes to ensure that the punches will pass through the bore of your coupling nut without interference. The diagonal of a square can be determined by multiplying the size of the square by 1.414, or refer to the diagonal table on page 77.

HEX. PUNCHES & DIES

Whistle Notch Locators

Hexagon dies are stocked without locators. Locators can be furnished on request.

Keyways in Head of Punch

Hexagon punches are stocked without keyways in the head. Keyways can be furnished on request.

Hexagon punch and die sizes are measured from flat to flat.

STOCK HEXAGON PUNCHES

● *Represents stock hexagon sizes*

	FIGURE NUMBER			
Size	12	16	20	26
11/32	●	●	●	●
3/8	●	●	●	●
13/32	●	●	●	●
7/16	●	●	●	●
15/32	●	●	●	●
1/2	●	●	●	●
17/32	●	●	●	●
9/16	●	●	●	●
19/32	●	●	●	●
5/8	●	●	●	●
21/32	●	●	●	●
11/16	●	●	●	●
23/32	●	●	●	●
3/4	●	●	●	●
25/32	●	●	●	●
13/16	●	●	●	●
27/32			●	●
7/8			●	●
29/32				●
15/16				●
31/32				●
1				●
1-1/32				●
1-1/16				●
1-3/32				●
1-1/8				●
1-5/32				●
1-3/16				●
1-7/32				●
1-1/4				●

STOCK HEXAGON DIES

● *Represents stock hexagon sizes*

	FIGURE NUMBER				
Size	46	55	59	60	62
3/8	●	●	●		●
13/32	●	●	●		●
7/16	●	●	●		●
15/32	●	●	●		●
1/2	●	●	●		●
17/32	●	●	●		●
9/16	●	●	●		●
19/32	●	●	●		●
5/8	●	●	●		●
21/32	●	●	●		●
11/16	●	●	●		●
23/32	●	●	●		●
3/4	●	●	●	●	●
25/32	●	●	●		●
13/16	●	●	●	●	●
27/32	●	●	●		●
7/8	●	●	●		●
29/32			●		●
15/16			●		●
31/32					●
1					●
1-1/32					●
1-1/16					●
1-3/32					●
1-1/8					●
1-5/32					●
1-3/16					●
1-7/32					●
1-1/4					●
1-9/32					●
1-5/16					●

GREEN TEAM TIP:

There may be occasions when it is necessary to check the diagonal of your hex size to ensure that the punch will pass through the bore of your coupling nut without interference. The diagonal of a hexagon can be determined by multiplying the size of the hex by 1.1547, or refer to hexagon diagonal table on page 77.

OFFSET DIES-STYLE 128

The following table lists our stock offset dies-Style 128. Refer to our **Cross Reference Catalog** for the proper tooling to fit your machine.

STOCK PUNCHES & DIES ARE SHIPPED THE SAME DAY ORDERED!
MADE TO ORDER SIZES CAN BE SHIPPED IN AS LITTLE AS 24 HOURS!

STYLE 128 OFFSET FLAT TOP (ECCENTRIC) DIES

POSITION "A"

POSITION "B"
IN STOCK

STOCK ROUND OFFSET DIES STYLE 128

● *Represents stock round sizes*

Size	FIGURE NUMBER 55	59	60	62
9/32	●	●	●	●
5/16	●	●	●	●
11/32	●	●	●	●
3/8	●	●	●	●
13/32	●	●	●	●
7/16	●	●	●	●
15/32	●	●	●	●
1/2	●	●	●	●
17/32	●	●	●	●
9/16	●	●	●	●
19/32	●	●	●	●
5/8	●	●	●	●
21/32	●	●	●	●
11/16	●	●	●	●
23/32	●	●	●	●
3/4	●	●	●	●
25/32	●	●	●	●
13/16	●	●	●	●
27/32	●	●	●	●
7/8	●	●	●	●
29/32	●	●	●	●
15/16	●	●	●	●
31/32	●	●	●	●
1	●	●	●	●
1-1/32	●	●	●	●
1-1/16		●	●	●
1-3/32		●	●	●
1-1/8		●	●	●

STOCK OBLONG OFFSET DIES STYLE 128B

▬ *Represents stock oblong sizes*

Size	FIGURE NUMBER 55	59	62
13/32 x 25/32	▬	▬	▬
13/32 x 1-1/32	▬	▬	▬
15/32 x 25/32	▬	▬	▬
15/32 x 1-1/32	▬	▬	▬
17/32 x 1-1/32	▬	▬	▬
19/32 x 25/32	▬	▬	▬
19/32 x 1-1/32	▬	▬	▬
23/32 x 1-1/32	▬	▬	▬
27/32 x 1-1/32	▬	▬	▬

The Style 128 Offset dies are manufactured with a minimum wall thickness (slug hole wall to die outside diameter) of 1/4" to ensure the strength of the die. Stock round and oblong Style 128 offset dies are furnished without locators. Locators can be furnished on request.

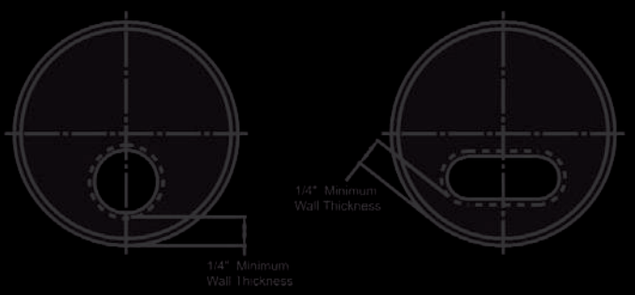

SAFETY WARNING!!!
Do not use an offset die if you cannot adjust your die holder.

SPECIAL PURPOSE DIES

SPECIAL PURPOSE IRONWORKER DIES are made to order and conform in every respect to the high quality of our standard dies. Style 129 and Style 241 offset dies, are manufactured with a minimum wall thickness (slug hole wall to die outside diameter) of 1/4" to ensure the strength of the die.

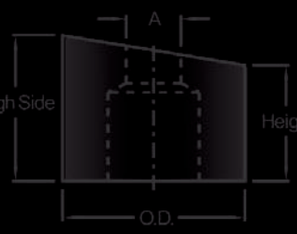

Style 127
Plain Bevel
Smooth Top
Concentric

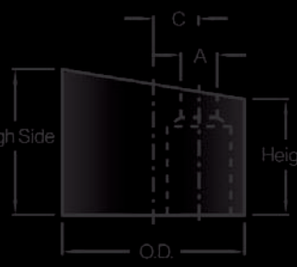

Style 129
Plain Bevel
Smooth Top
Eccentric

PLAIN BEVEL SMOOTH TOP DIES

are non-marring dies designed especially for use in punching structural shapes such as "I" beams, channels and angle iron. Plain bevel smooth dies are recommended where the material punched is angled or does not have a uniform thickness.

SAWTOOTH TOP DIES

perform the same function as our plain bevel smooth top dies. Sawtooth dies are recommended where there is a tendency for the material to slip during punching. The serrated top surface will grab the material more securely and help hold it in place during the punching operation.

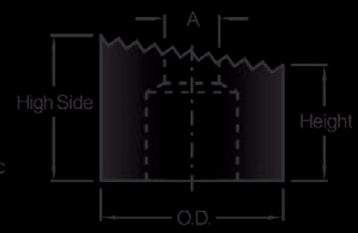

Style 218
Bevel
Serrated
Sawtooth
Concentric

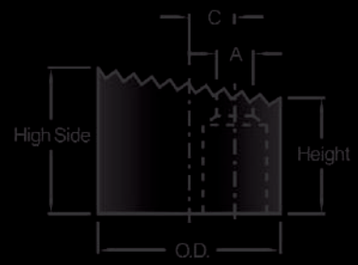

Style 241
Bevel
Serrated
Sawtooth
Eccentric

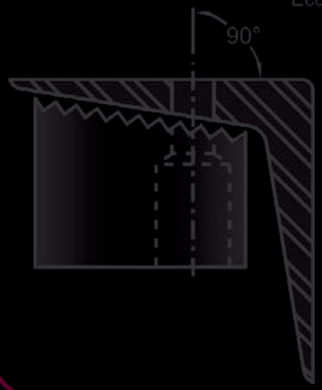

Most large structural shapes have a standard angle. All our bevel dies match this angle to ensure that the hole will be perpendicular to the outside surface.

HEXAGON

POSITION "A" POSITION "B"

SQUARE

POSITION "A" POSITION "B"

OBLONG

POSITION "A" POSITION "B"

PARALLEL TO BEVEL

PERPENDICULAR TO BEVEL

SAFETY WARNING!!!
Do not use an offset die if you cannot adjust your die holder.

STRAIGHT SHANK PUNCHES

The following table lists our stock straight shank punches. Refer to our **Cross Reference Catalog** for the proper tooling to fit your machine.

STOCK PUNCHES & DIES ARE SHIPPED THE SAME DAY ORDERED!

MADE TO ORDER SIZES CAN BE SHIPPED IN AS LITTLE AS 24 HOURS!

STOCK ROUND STRAIGHT SHANK PUNCHES

● *Represents stock round sizes*

	FIGURE NUMBER	
Size	**M-23**	**M-24**
1/8	●	●
5/32	●	●
3/16	●	●
7/32	●	●
1/4	●	●
9/32	●	●
5/16	●	●
11/32	●	●
3/8	●	●
13/32	●	●
7/16	●	●
15/32	●	●
1/2	●	●
17/32	●	●
9/16	●	●
19/32		●
5/8	●	●
21/32		●
11/16		●
23/32		●
3/4		●

M-23

IN STOCK

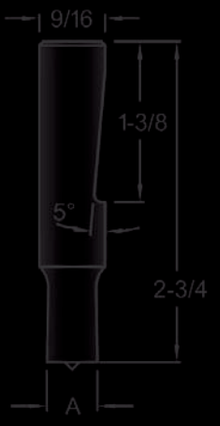

M-24

IN STOCK

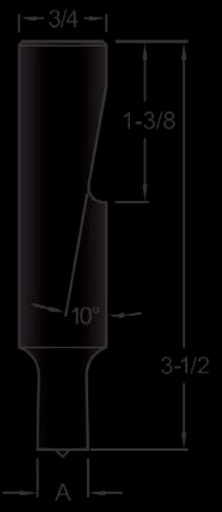

MADE TO ORDER STRAIGHT SHANK PUNCHES

We manufacture various types of straight shank punches which we can furnish to your specifications or drawings. When ordering, kindly furnish the figure number, shape and the dimensions indicated in the diagrams. If the punch required is not shown, please furnish a sketch or drawing.

F-114

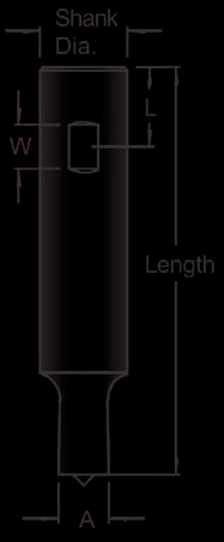

F-115

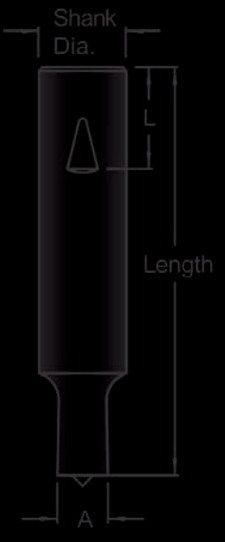

F-118

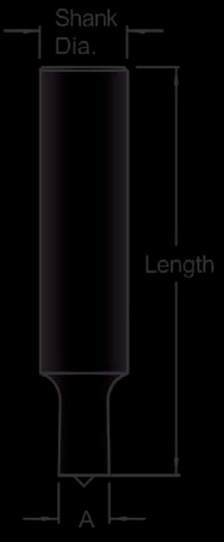

F-119

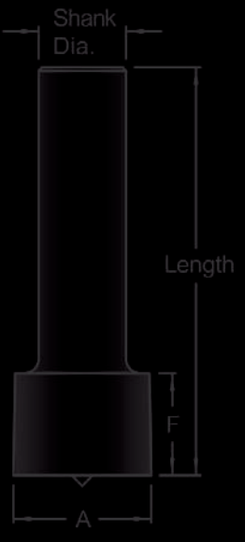

SPECIAL PURPOSE TOOLING

STOCK CORNER RADIUS TOOLING

Corner radius tooling generates a corner radius on material thickness up to 1/4". The die has a built in guide to locate material. When ordering, please specify figure number, radius required and material thickness.

STOCK PUNCHES
FIGURE NUMBER

Radius Size	16	20	26
3/8	◗	◗	◗
7/16	◗	◗	◗
1/2		◗	◗
9/16			◗
3/4			◗

◗ *Represents stock sizes*

STOCK DIES
FIGURE NUMBER

Radius Size	55	59	62
3/8	◗	◗	◗
7/16	◗	◗	◗
1/2		◗	◗
9/16			◗
3/4			◗

◗ *Represents stock sizes*

SHAPE X-17

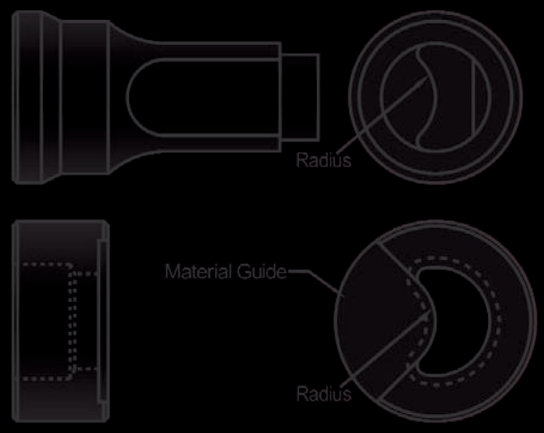

Maximum Material Thickness:
1/4" mild steel

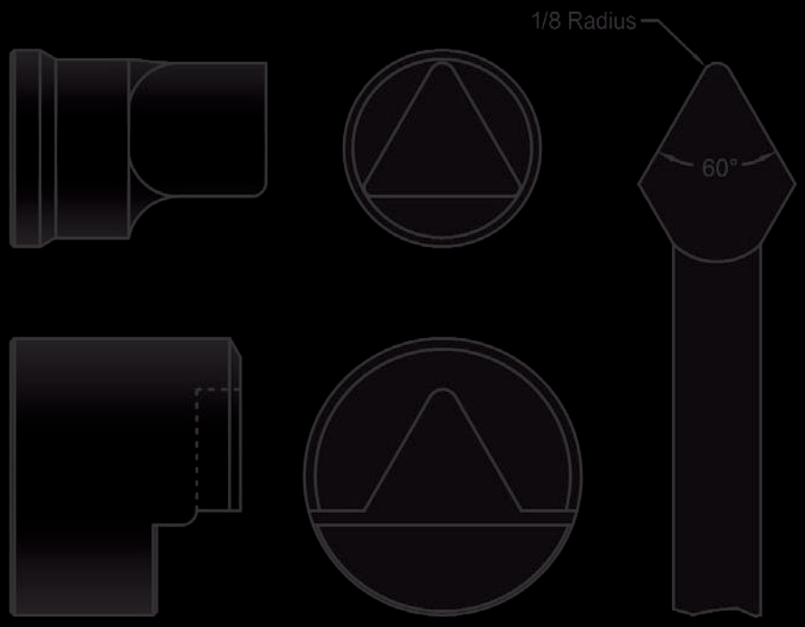

STOCK PICKET TOOLING

Picket tooling generates a 60 degree picket on square tubing. When ordering, please specify figure number, tubing size and material thickness.

NOTE: MAXIMUM MATERIAL THICKNESS = 16 GAUGE (.0598).

STOCK PUNCHES & DIES
FIGURE NUMBER

Tubing Size	26	62
1/2	↑	↑
5/8	↑	↑
3/4	↑	↑
1	↑	↑

↑ *Represents stock sizes*

STOCK PUNCHES & DIES ARE SHIPPED THE SAME DAY ORDERED!
MADE TO ORDER SIZES CAN BE SHIPPED IN AS LITTLE AS 24 HOURS!

KEYHOLE TOOLING

Keyhole tooling is made to order. When ordering, kindly furnish the figure number, shape, material thickness and the dimensions indicated in the diagrams.

NOTE: 1/8" RADIUS OR LARGER RECOMMENDED.

SHAPE X-10

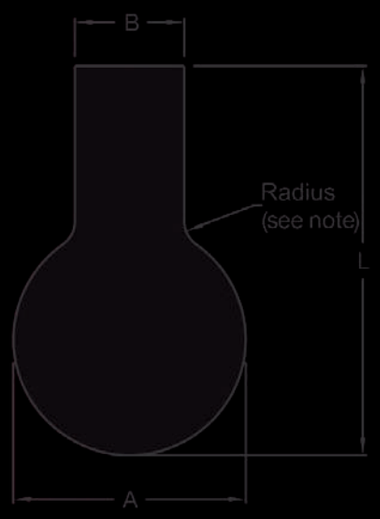

SHAPE X-11

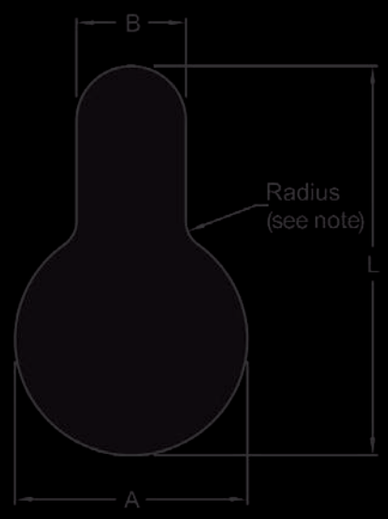

COUNTERSINK TOOLING

Countersink tooling generates a hole and a countersink for a flat head screw. Countersink and form tooling can be used on material 1/8" thick and up. Countersink and extrude tooling can be used on material less than 1/8" thick. When ordering, kindly furnish the figure number, shape, material thickness and screw size.

Countersink and form

Countersink and extrude

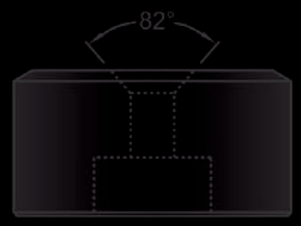

SPECIAL PURPOSE TOOLING

LATTICE BAR TOOLING

Lattice bar tooling shears and generates end radii on flat bar stock in one operation. When ordering, please specify figure number, radius required, material width and thickness.

NOTE: MAXIMUM MATERIAL THICKNESS = 3/8

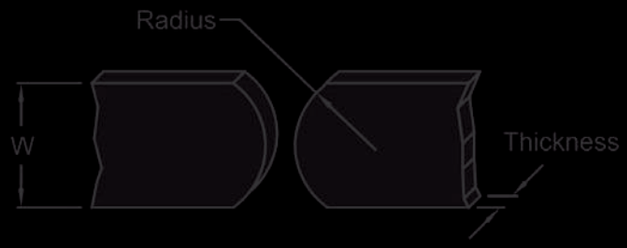

SHAPE X-8

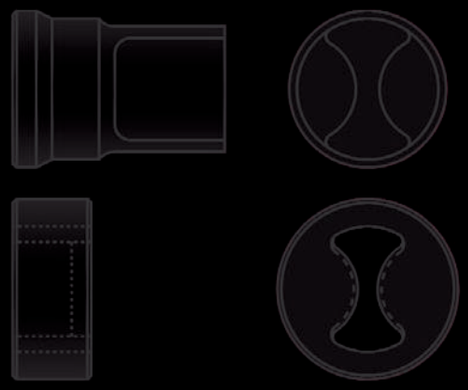

STANDARD ELECTRICAL PUSH-BUTTON TOOLING

Electrical push-button tooling is made to order. The dimensions shown are standard as listed by specific vendor. If the shape required is not shown, please furnish a sketch or drawing. When ordering, please specify figure number, vendor shape and material thickness.

SHAPE X-37

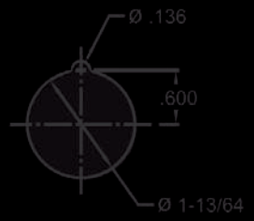

Cutler-Hammer™

SHAPE X-38

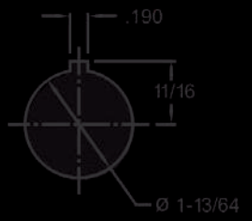

General Electric™

SHAPE X-39

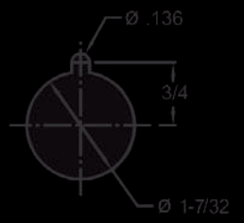

Square D™
Westinghouse™

SHAPE X-40

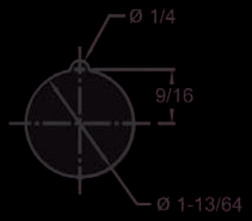

Allen Bradley™
Clark™
General Electric™
Westinghouse™

SHAPE X-41

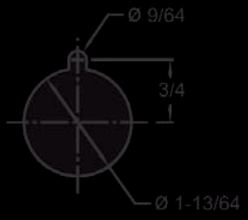

Allis Chalmers™
Furnas Electric™

SHAPE X-42

SHAPE X-43

G. E. Miniature™

DOUBLE STEP PUNCH

Double step punches are used for generating a hole in hard to reach areas such as angle or channel. When ordering, kindly furnish the figure number, shape, material thickness and the dimensions indicated in the diagram.

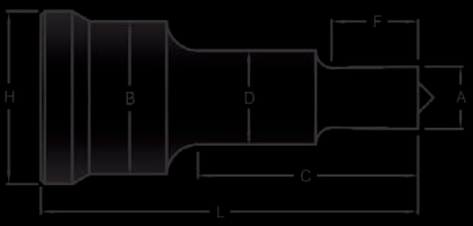

SPECIAL PURPOSE PUNCHES

STOCK PUNCHES & DIES ARE SHIPPED THE SAME DAY ORDERED!
MADE TO ORDER SIZES CAN BE SHIPPED IN AS LITTLE AS 24 HOURS!

RIPPING AND HEEL PUNCHES

When ordering, kindly furnish the figure number, shape, material thickness and the dimensions indicated in the diagrams. The guide should be 1/8" to 1/4" longer than the material thickness.

SAFETY WARNING!!!
Do not punch with the guide or heel.

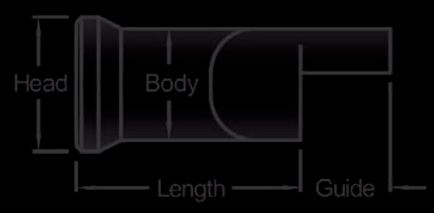

Oblong Ripping Punch

Oblong Heel Punch

Rectangular Heel Punch

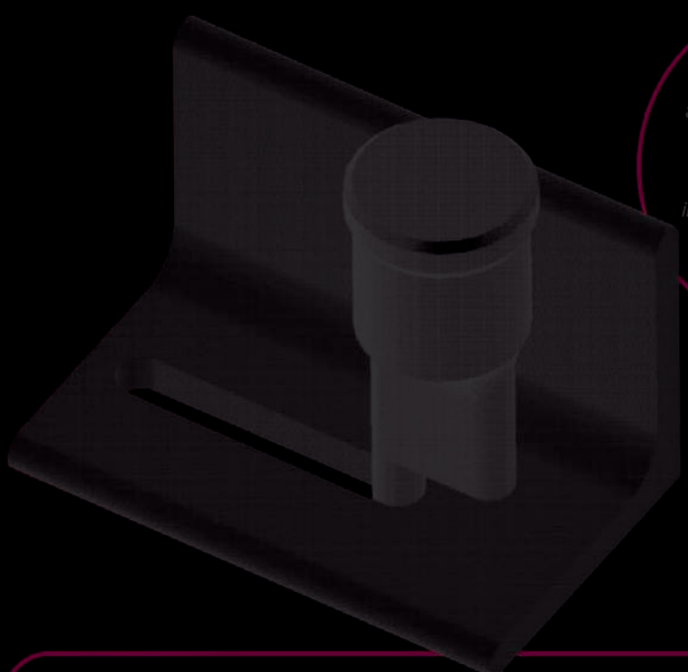

GREEN TEAM TIP:
Use a Ripping Punch to generate an oblong hole beyond the capacity of your ironworker. First, punch a round hole the same size as the width of your oblong hole. Next, insert the guide of the ripping punch through the pre-punched hole and begin cycling the machine while feeding the material into the guide.

OSHA WARNING
It is the user's responsibility that the machine and **tooling** be set up and used in accordance with local and national OSHA Laws and ANSI B11.5 standards for safety.
Do not permit unqualified personnel to setup or operate the machine. Extreme care should be used at all times.

FLAT HEAD PUNCH

Flat head punches are often used in custom design tooling sets. When ordering, kindly furnish the shape, material thickness and the dimensions indicated in the diagram.

STOCK CENTER PUNCHES

Center punches are known throughout the industry for their reliability and durability. When ordering, please furnish the size and length required.

STOCK SIZES

S	L
1/2	5
1/2	6
5/8	5
3/4	6
7/8	6
7/8	6-1/4

STOCK TRANSFER PUNCH

The following table lists our stock style 145 transfer punches. Made to order sizes can be shipped in as little as 24 hours.

STYLE 145 (STOCK)

Fig. No.	A	F	S	L
290	17/64	1/2	1/2	5
291	25/64	3/4	1/2	5
292	33/64	1	3/4	5-1/2
293	43/64	1-1/4	3/4	5-1/2
294	51/64	1-1/2	7/8	6
295	59/64	1-3/4	1	6
296	1-3/64	2	1-1/8	6

STYLE 145 IN STOCK

STYLE 146 (made to order*)

Style 146 transfer punches are made to order. Sizes can be shipped in as little as 24 hours.

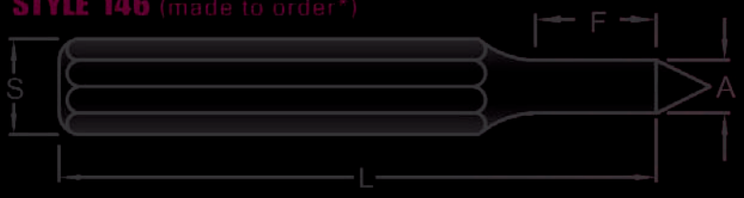

STOCK TAPER SHANK PUNCHES

The following table lists our stock taper shank punches. Made to order sizes can be shipped in as little as 24 hours. Refer to pages 18-19 for stock round dies.

● *Represents stock round sizes*

FIGURE NUMBER

Size	C-64	C-65	C-66
5/16	●		
11/32	●		
13/32	●		
15/32	●		
17/32	●	●	
9/16		●	
19/32		●	
21/32		●	●
25/32			●
29/32			●

C-64 IN STOCK

C-65 IN STOCK

C-66 IN STOCK

METAL CULVERT TOOLING

The following page illustrates our metal culvert tooling. Refer to tables for stock punches, dies and hammers. Refer to our **Cross Reference Catalog** for the proper tooling to fit your machine.

STOCK PUNCHES & DIES ARE SHIPPED THE SAME DAY ORDERED!
****MADE TO ORDER SIZES CAN BE SHIPPED IN AS LITTLE AS 24 HOURS!***

STANDARD METAL CULVERT PUNCHES

STOCK ROUND PUNCHES

● *Represents stock round sizes*

FIGURE NUMBER

Size	86
11/32	●
13/32	●
15/32	●
17/32	●

F-041*

F-042*

F-045*

F-86

IN STOCK

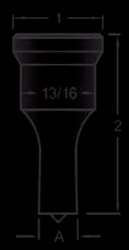

F-12

IN STOCK

STANDARD METAL CULVERT HAMMERS

F-H86A*

F-H86B*

F-H86C*

F-H16*

F-H16* (serrated)

STANDARD METAL CULVERT DIES

STOCK ROUND DIES

● *Represents stock round sizes*

FIGURE NUMBER

Size	111	120
3/8	●	●
7/16	●	●
15/32	●	
1/2	●	
9/16	●	

F-050*

F-120 (FDP2)

IN STOCK

F-120S*

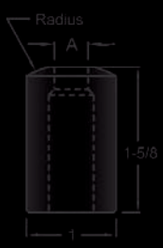

F-FDP3*

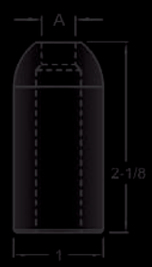

F-111

IN STOCK

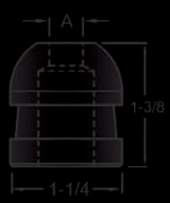

F-121*

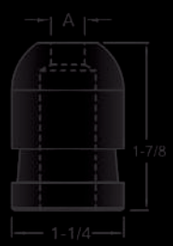

F-121S*

F-FDP1*

STANDARD METAL CULVERT ANVIL

F-113

IN STOCK

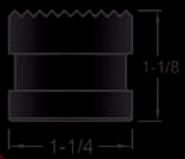

F-113S*

STOCK PUNCH REDUCING SLEEVES

Reducing sleeves allow a wider use of punches utilizing the same coupling nut. F-75 through F-79 are available from stock. Made to order sleeves can be shipped in as little as 24 hours.

F-75
Use with Cleveland CN-32 coupling nut to hold F-28 and F-29 punches.

F-76
Use with Cleveland CN-16, CN-16A, CN-16B, CN-16C, CN-16D, CN-16E, CN-16F coupling nut to hold F-6 punch.

F-77
Use with Cleveland CN-32 coupling nut to hold F-30 and F-31 punches.

F-78
Use with Cleveland CN-16, CN-16A, CN-16B, CN-16C, CN-16D, CN-16E, CN-16F coupling nut to hold F-11 punch.

F-79
Use with Cleveland CN-26A, CN-26B and CN-26C coupling nut to hold F-16 punch.

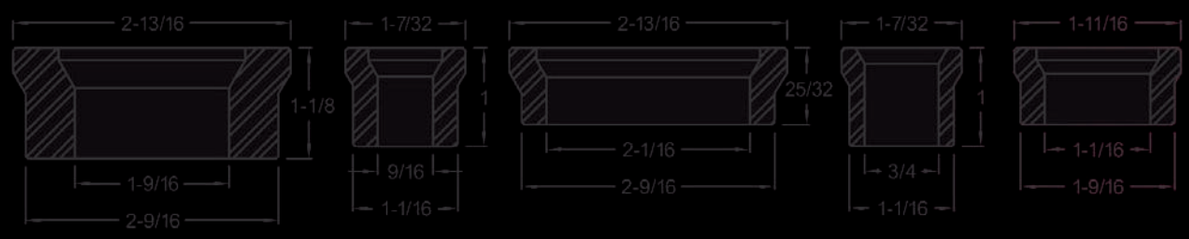

STOCK DIE REDUCERS

Die reducers are used to reduce to smaller O.D. dies. The following table lists our stock die reducers. Made to order sizes can be shipped in as little as 24 hours. When ordering please specify dimensions indicated in the diagram.

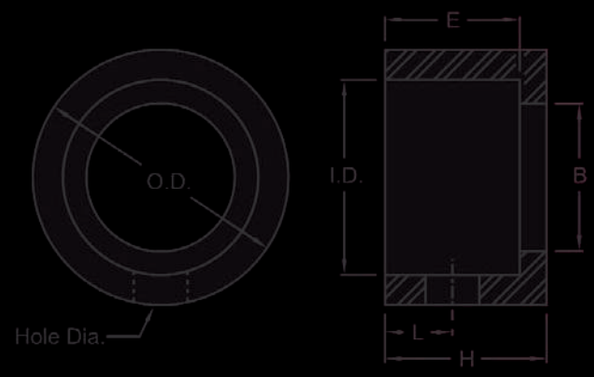

STOCK DIE REDUCERS

	O.D.	I.D.	B	E	H	L	Hole Dia.
F-62 to F-55	2-3/8	1-13/16	1-5/16	1-1/16	1-1/4	7/16	5/8
F-62 to F-59	2-3/8	2	1-15/32	15/16	1-1/4	9/16	5/8

STOCK PUNCH & DIE SPACERS

Punch spacers are used to extend the overall punch length. Die spacers increase the die height. A large variety of both are available for more commonly used punches and dies. Made to order sizes can be shipped in as little as 24 hours. When ordering please specify dimensions indicated in the diagram.

PUNCH SPACER

DIE SPACER

PUNCH STEMS

This page illustrates common types of made to order punch stems. When ordering, kindly furnish the figure number and the dimensions indicated in the diagrams or furnish us with a sketch or drawing. If possible, please provide a sample stem.

STOCK PUNCHES & DIES ARE SHIPPED THE SAME DAY ORDERED!

MADE TO ORDER SIZES CAN BE SHIPPED IN AS LITTLE AS 24 HOURS!

F-290

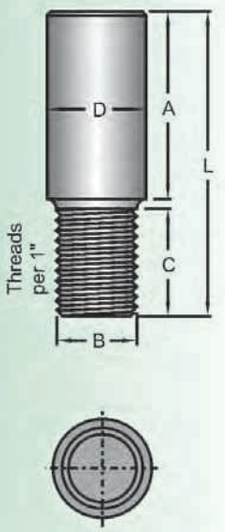

F-290 Oversize

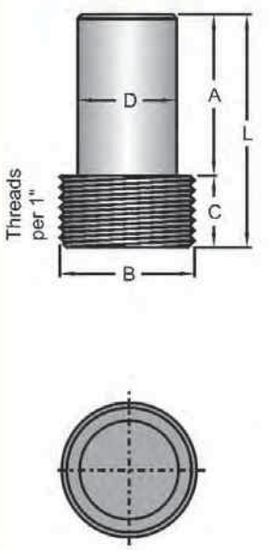

F-291

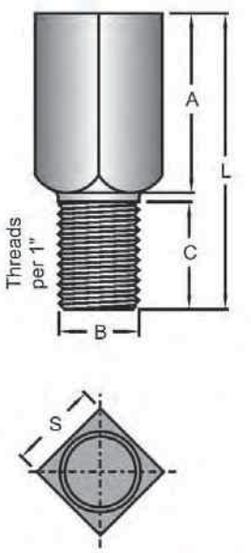

F-292

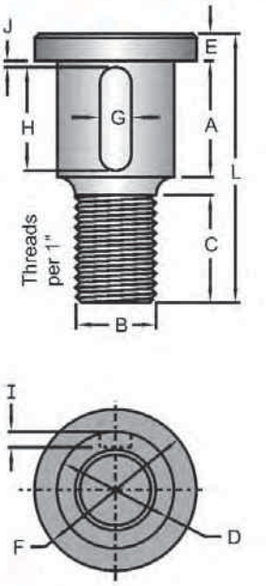

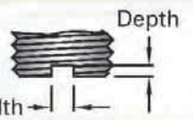

GREEN TEAM TIP:
To help eliminate rotational movement of punches, we recommend putting keyways in the face of the punch stem. Specify the width and depth when ordering.

F-293

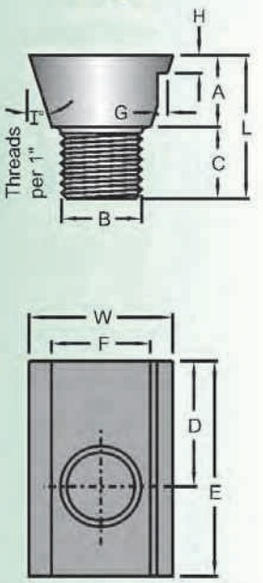

F-294

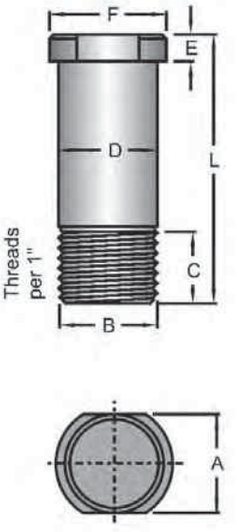

F-295

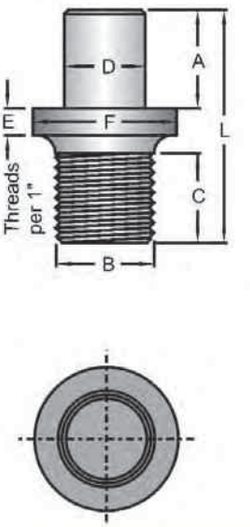

F-296

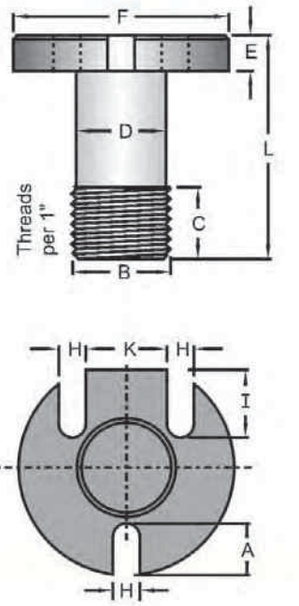

STOCK PATENTED URETHANE PUNCH STRIPPER PATENT NUMBER 5,056,391

Our patented punch strippers are designed to solve difficult stripping applications. Urethane strippers are fused to a close center coupling nut. Stock nuts have a 1-9/16-12TPI thread and a 1.255 bore to hold F-20 punches. Other nut configurations can be made to order.

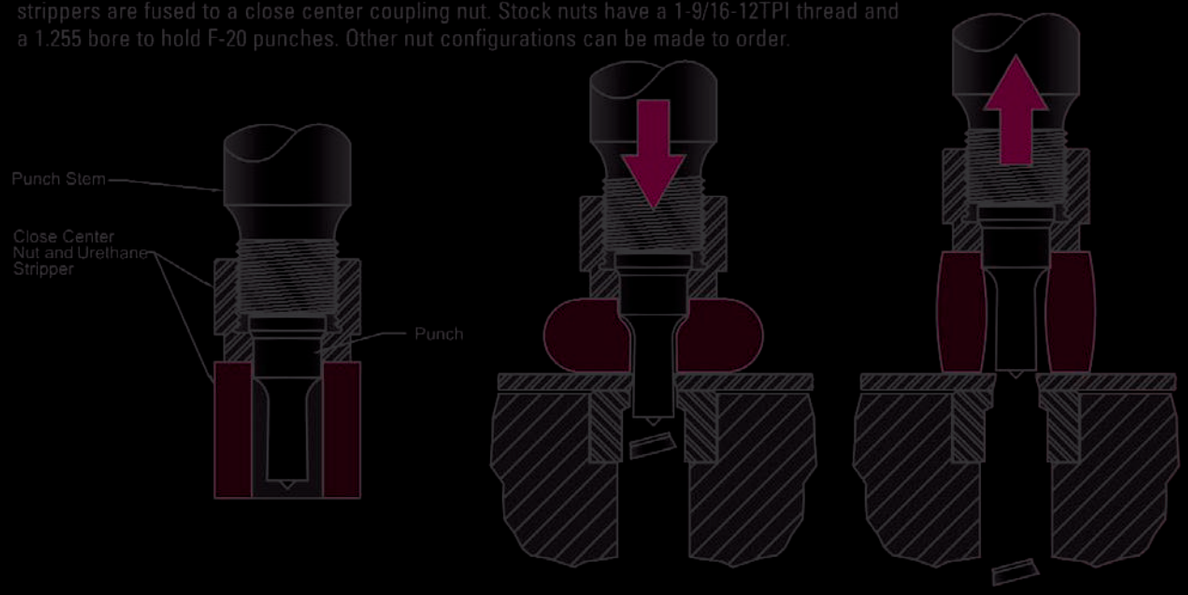

ASSEMBLY VIEW DOWN STROKE UP STROKE

STOCK URETHANE STRAIGHT SHANK PUNCH STRIPPERS

Our stock urethane, Durometer hardness 90A and 95A punch strippers, are designed to be used with straight shank, 28XX and Bateman style punches. When ordering, kindly furnish the figure number and Durometer hardness. If the stripper required is not listed, please furnish the dimensions indicated and Durometer hardness.

FIGURE NUMBER		DESCRIPTION		
Durometer 90A	Durometer 95A	I.D.	O.D.	Length
UBBC	UBRC	5/8	1-1/8	1-1/8
U0BC	U0RC	1	2	2-1/8
U1BC	U1RC	1-1/2	2-3/4	2-1/8
U2BC	U2RC	2	3	2-1/8
U3BC	U3RC	3	4	2-1/8

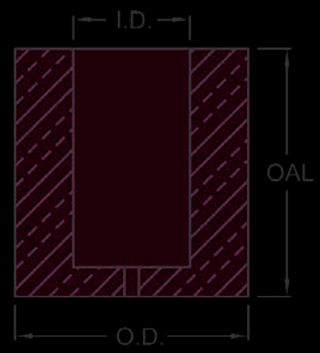

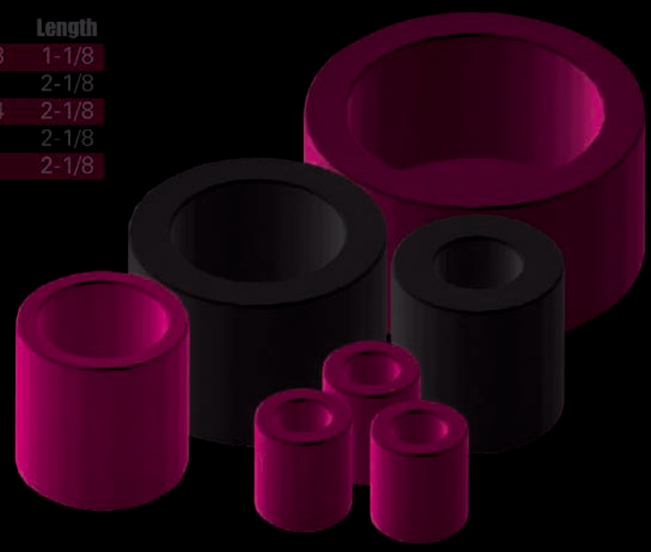

STOCK COUPLING NUTS

The following tables list our stock coupling nuts. Refer to our **Cross Reference Catalog** for the proper tooling to fit your machine.

STOCK PUNCHES & DIES ARE SHIPPED THE SAME DAY ORDERED!

****MADE TO ORDER SIZES CAN BE SHIPPED IN AS LITTLE AS 24 HOURS!***

COUPLING NUT NUMBER	OLD COUPLING NUT NUMBER	HEXAGON SIZE	THREADS PER INCH	A LARGEST O.D.	B THREAD DIAMETER	C BORE	D LENGTH	USE WITH PUNCH FIGURE NUMBER
CN-2	PW-2	1-1/4	12	1-9/32	11/16	.413	1-13/16	2
CN-2A	R-0	1-1/16	14	1-9/32	11/16	.437	15/16	2
CN-3	PW-3	1-3/8	12	1-11/16	7/8	.600	1-3/16	3
CN-3A	R-1	1-3/8	12	1-23/32	7/8	.593	1-5/16	3
CN-4	C-1	1-5/8	10	1-7/8	1-1/8	.570	1-5/16	4, 6
CN-7	PW-4	1-3/4	12	1-15/16	1-1/16	.788	1-3/16	7
CN-9	R-2	1-5/8	10	1-7/8	1-1/8	.843	1-5/16	9
CN-11	C-2	1-5/8	10	1-7/8	1-1/8	.757	1-5/16	11
CN-12	PW-5	2	12	2-1/4	1-5/16	1.038	1-1/4	12
CN-16	C-3S	2	10	2-5/16	1-3/8	1.070	1-5/8	15, 16 17, 19 19L
CN-16A	C-19	2	10	2-5/16	1-3/8	1.070	1-5/16	
CN-16B	C-20	2	10	2-5/16	1-7/16	1.070	1-5/8	
CN-16C	C-21	2-1/4	10	2-5/8	1-5/8	1.070	1-5/8	
CN-16D	PW-7A	2-1/2	12	2-29/32	1-7/8	1.070	1-5/8	
CN-16E	C-3	2-1/2	10	2-7/8	2	1.070	1-5/8	
CN-16F	R-3	2-1/4	10	2-5/16	1-13/32	1.093	1-5/8	
CN-20	PW-6A	2-1/4	12	2-5/8	1-9/16	1.228	1-1/2	20, 21
CN-20A	PW-7B	2-1/2	12	2-29/32	1-7/8	1.228	1-5/8	
CN-20B	C-4A	2-1/2	10	2-7/8	2	1.228	1-5/8	
CN-20C	PW-6B	2-1/4	12	2-5/8	1-9/16	1.255	1-1/2	20 WITH 1-1/4 PT. SIZE
CN-20D	C-4C	2-1/2	10	2-7/8	2	1.255	1-5/8	
CN-23	C-4	2-1/2	10	2-7/8	2	1.320	1-5/8	23
CN-23A	R-4	2-1/4	10	2-5/8	1-11/16	1.343	1-15/32	
CN-26	C-4B	2-1/2	10	2-7/8	2	1.537	1-5/8	26
CN-26A	PW-7	2-1/2	12	2-7/8	1-7/8	1.570	1-5/8	26 WITH 1-9/16 PT. SIZE
CN-26B	C-4D	2-1/2	10	2-7/8	2	1.570	1-5/8	26 WITH 1-9/16 PT. SIZE
CN-26C	C-5	3-1/2	10	4-1/16	2-5/8	1.570	2-1/8	26 WITH 1-9/16 PT. SIZE
CN-28	R-5	2-1/2	10	2-7/8	2	1.593	1-5/8	28, 29
CN-30	C-6	3-1/2	10	4-1/16	2-5/8	2.070	2-1/8	30, 31
CN-32	C-7	4	10	4-5/8	3	2.578	2-3/8	32
CN-48	PW-8	3	12	3-1/2	2-1/4	1.812	1-11/16	C-48
CN-48A	R-6	3	10	3-1/2	2-1/4	1.812	1-11/16	C-48
CN-50	C-50	3-3/4	12	4-21/64	2-3/4	2.288	1-13/16	C-50
CN-52*	C-52	4-1/4	8	4-1/8	3-1/4	2.663	2	C-52
CN-53*	C-53	5	8	5-3/4	3-7/8	3.288	2-1/8	C-53
CN-54*	C-54	6	6	6-7/8	4-7/8	4.163	2-3/4	C-54

CLOSE CENTER COUPLING NUTS

CN-A	A	1-1/4	10	1-7/16	1-1/8	.570	1-5/16	4, 6
CN-E	E	1-5/8	10	1-15/16	1-3/8	1.070	1-5/8	15, 16, 17, 19 & 19L
CN-I	I	1-7/8	10	2-3/16	1-5/8	1.070	1-5/8	
CN-J	J	2-3/16	10	2-7/16	1-5/8	1.320	1-5/8	23

STANDARD COUPLING NUT

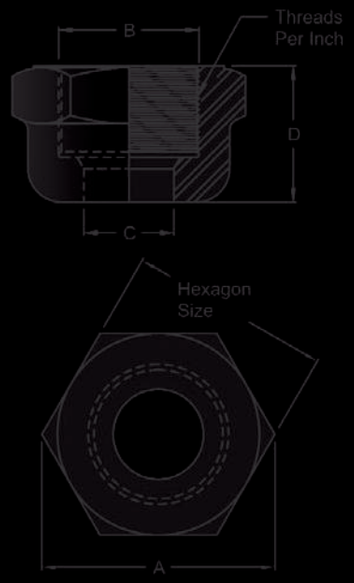

GREEN TEAM TIP:
Coupling nuts can be relieved for some oversize shapes as illustrated below for oblong and square.

CLOSE CENTER COUPLING NUTS

When minimum center distances are required, close center coupling nuts are available from stock

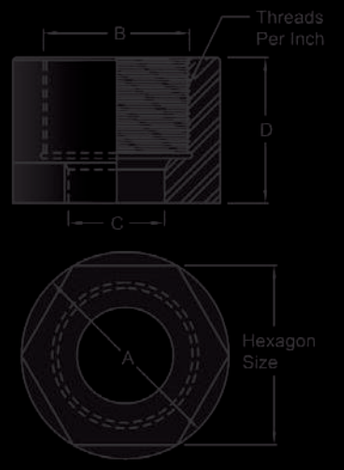

STOCK COUPLING NUTS

COUPLING NUT NUMBER	OLD COUPLING NUT NUMBER	HEXAGON SIZE	THREADS PER INCH	A LARGEST O.D.	B THREAD DIAMETER	C BORE	D LENGTH	USE WITH PUNCH FIGURE NUMBER
BUFFALO COUPLING NUTS								
CN-362	77A	1-5/8	14	1-7/8	1-1/8	53/64	1-1/8	362
CN-664	78B	2	12	2-5/16	1-3/8	1-5/64	1-3/8	664
CN-903A*	77D	2-1/2	12	2-29/32	1-5/8	1.228	1-3/8	20
CN-903B	77D	2-1/2	12	2-29/32	1-7/8	1.228	1-3/8	20
CN-3T	77E	2-1/2	12	2-29/32	1-7/8	1.445	1-9/16	3T W/1.437 BODY
CN-3TA	77F	2-1/2	12	2-29/32	1-7/8	1-33/64	1-9/16	3T W/1.500 BODY
MUBEA COUPLING NUTS								
CN-H1	C-H1	2	2 PITCH	2-5/16	42mm	1.130	1-5/8	H-1
CN-H2*	C-H2	2-1/2	2 PITCH	2-29/32	52mm	1.228	1-5/8	H-2
CN-H3*	C-H3	2-1/2	2 PITCH	2-29/32	52mm	1.583	1-5/8	H-3
CN-H4*	C-H4	3-1/2	2 PITCH	4-1/16	64mm	2.012	1-9/16	H-4
W.A. WHITNEY/FABRILINE COUPLING NUTS								
CN-720	720-020-001	1	16	1-3/16	1	11/16	.745	C-720
CN-720 SPLIT	720-020-002	1	16	1-3/16	1	11/16	.745	C-720 O.S.
CN-740	740-040-001	1-3/4	12	2-1/32	1-3/8	1.005	1.200	C-740
CN-740 SPLIT	740-040-002	1-3/4	12	2-1/32	1-3/8	1.005	1.200	C-740 O.S.
CN-770	770-016	2	12	2-21/64	1-3/4	1.255	1-3/8	C-770
CN-770 SPLIT	770-024	2	12	2-21/64	1-3/4	1.255	1-3/8	C-770 O.S.
CN-272	3750042	2-3/4 RD	12	2-13/16	1-7/8	1.255	1-7/8	C-770
CN-282	3750735	2-3/4 RD	12	2-13/16	1-7/8	1.502	1-7/8	C-282
CN-790-070	790-070	2-5/16	12	2-5/16	1-3/4	N/A	2-5/8	C-770 O.S.
MISCELLANEOUS COUPLING NUTS								
CN-13	NITTO NUT	1.800	1.5 PITCH	1.800	33MM	1.170	1.075	13
CN-13 SPLIT	NITTO SPLIT	1.800	1.5 PITCH	1.800	33MM	1.170	1.075	13 O.S.
CN-56	330406	2	12	2-5/16	1-3/8	1-5/64	1-3/8	16
CN-EDW	C-EDW	2-1/4	6	2-5/8	1-1/2	1.070	1-3/4	16
CN-SR20	624	1-5/16	14	1-1/2	1-5/6	1.000	1-3/8	SR20
CN-UH20	421	1-3/4	14	2-1/32	1-7/16	1.010	1	SR20

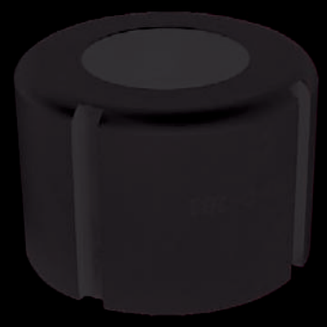

FABRILINE™
CN-272 & CN-282 Coupling Nuts
IN STOCK

W. A. WHITNEY™
CN-790-070 Straight Coupling
IN STOCK

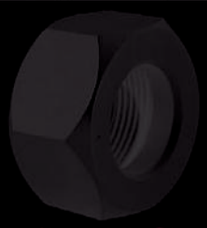

UNI-HYDRO™
CN-UH20 Coupling Nut
IN STOCK

SCOTCHMAN™
CN-SR20 Coupling Nut
IN STOCK

W. A. WHITNEY™
CN-720, CN-740, CN-770 Coupling Nuts
IN STOCK

DIE HOLDERS

The following pages illustrate our common types of made to order die holders. When ordering, please furnish dimensions indicated in the diagram or furnish us with a sketch or drawing. If possible, please provide a sample die holder.

STOCK PUNCHES & DIES ARE SHIPPED THE SAME DAY ORDERED!

MADE TO ORDER SIZES CAN BE SHIPPED IN AS LITTLE AS 24 HOURS!

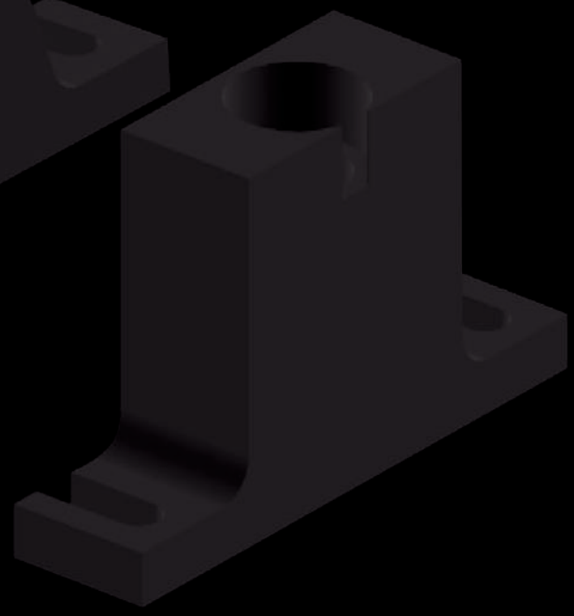

Triple Die Holder

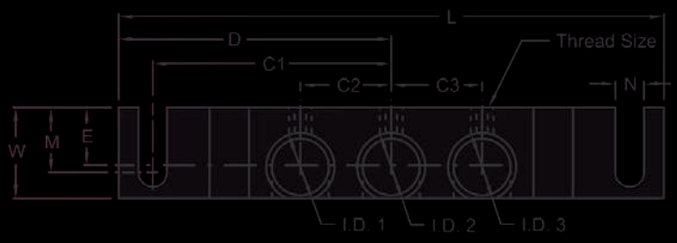

Ironworker Die Holder

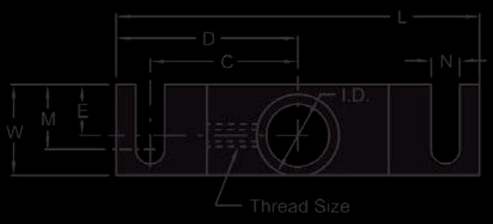

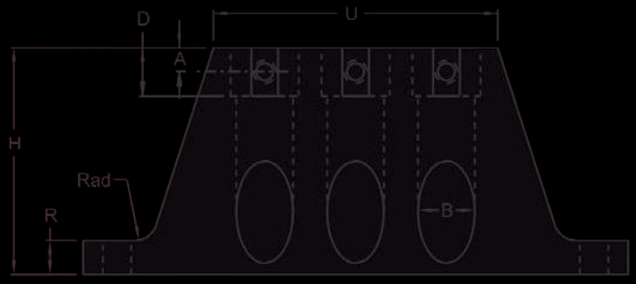

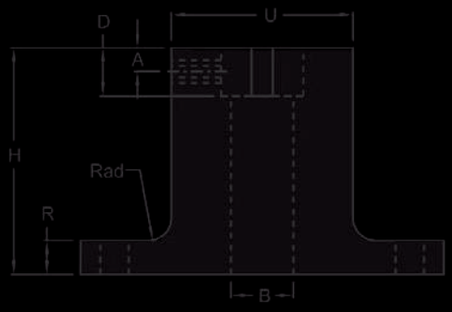

DIE HOLDERS

Structural Die Holder

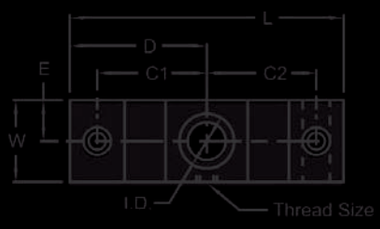

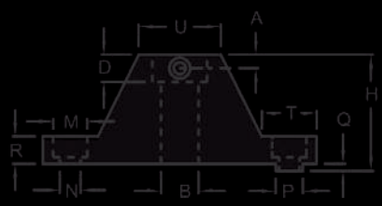

Portable C-Frame Die Holder

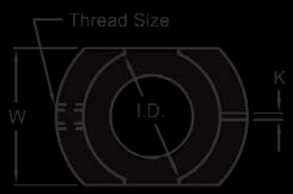

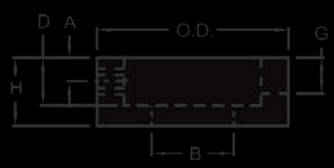

Split Die Holder

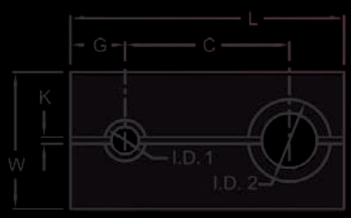

Dovetail Die Holder

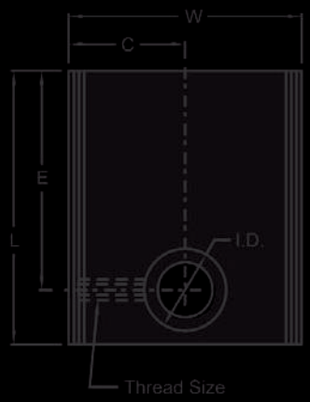

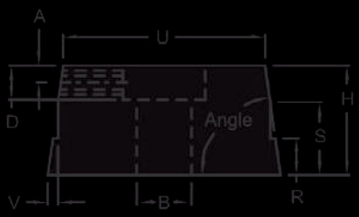

Press Brake Die Holder

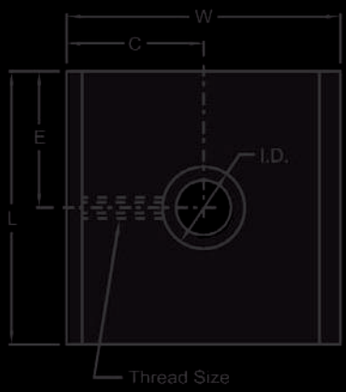

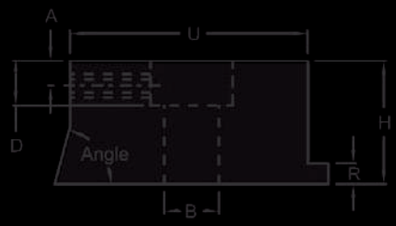

Close Gauge Die Holder

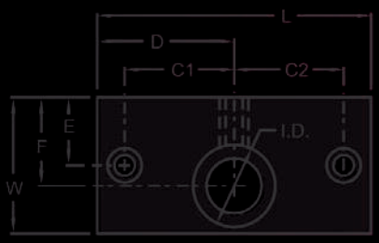

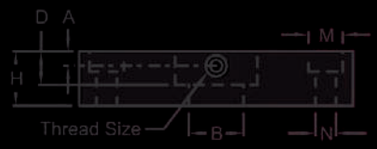

SHEAR BLADES

This page illustrates common types of made to order shear blades. When ordering, kindly furnish the dimensions indicated in the diagrams or furnish us with a sketch or drawing. If possible, please provide a sample blade.

STOCK PUNCHES & DIES ARE SHIPPED THE SAME DAY ORDERED!

MADE TO ORDER SIZES CAN BE SHIPPED IN AS LITTLE AS 24 HOURS!

FLAT BAR

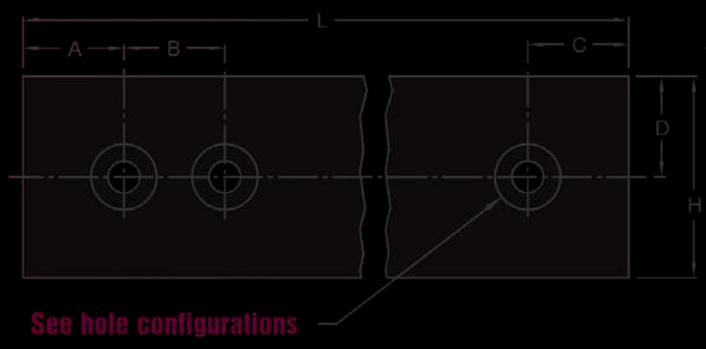

Reversible Plain

Reversible Rake

Single Rake Relieved

BAR SHEAR

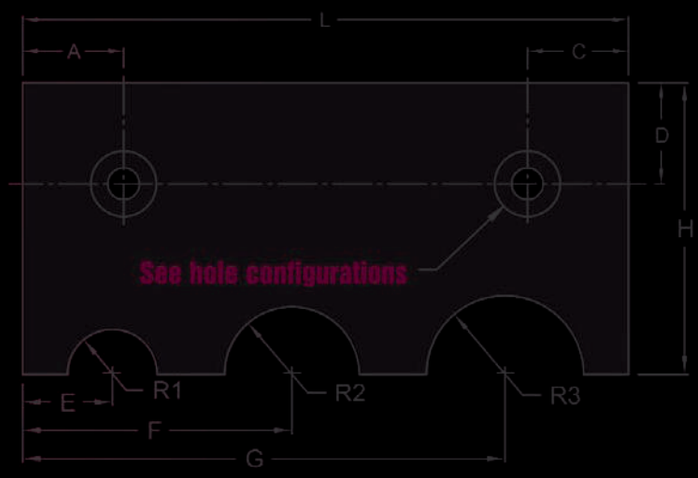

ANGLE BLADE

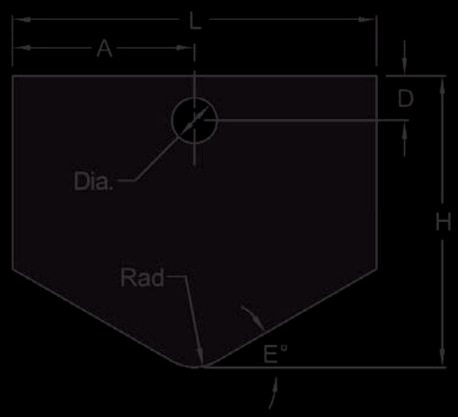

HOLE CONFIGURATIONS

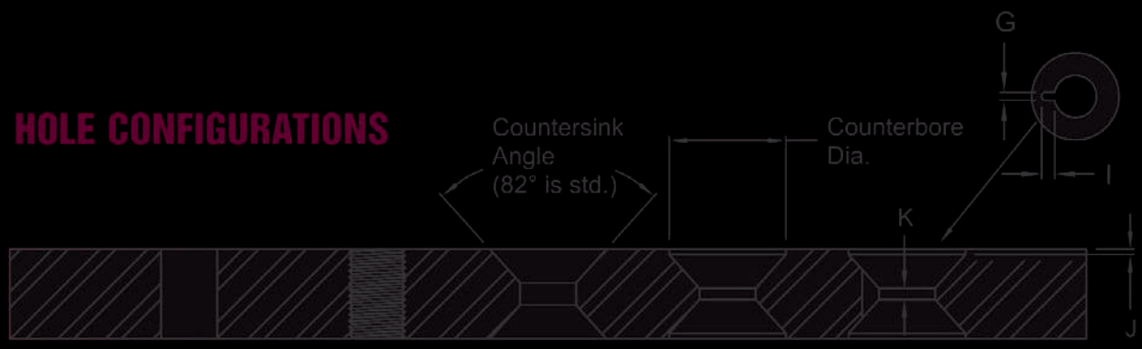

Drill Thru

Threaded

Drill Thru
Countersunk
1 or both sides

Drill Thru
Countersink
Counterbore
1 or both sides

Drill Thru
Countersink
Counterbore
Keyed
1 or both sides

PUNCH ENDS/DIE PROFILES

Punch End Configurations

Below are our most common punch end configurations. Stock punches are manufactured with a crown edge with center. Made to order punch ends can be shipped in as little as 24 hours.

FLAT FACE
For punching very thin material, or when the slug is being saved.

STRAIGHT EDGE
For use with thin material when a locator is needed.

CROWN EDGE WITH CENTER
CPD's stock punch end. General purpose use.

FULL CROWN
For extremely hard material that would normally smash or break the center point.

CHISEL POINT
Reduces tonnage and the shock.

CHISEL POINT WITH CENTER
Same as chisel point, but where a center point is needed.

CRISS-CROSS SHEAR
Reduces material deformation on thin material.

CONCAVE SHEAR
Reduces material deformation on thin material.

Special Die Top Profiles

We manufacture any die top profile that you require. When ordering, kindly furnish the die figure and a drawing or fax of the profile you require.

SHEAR TOP

SPLICE BAR

TIE PLATE

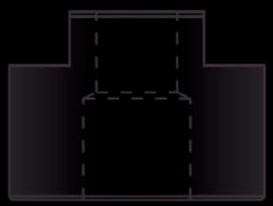

CHANNEL

PRESS BRAKE TOOLING

Cleveland Punch & Die can supply all your press brake and forming tooling. We can provide punches and dies for forming, bending, shearing and flattening. For made to order configurations, please furnish us with a sketch or drawing. Let **Cleveland Punch & Die** be your one stop punch and die supplier for all of your tooling requirements!

STOCK PUNCHES & DIES ARE SHIPPED THE SAME DAY ORDERED!

MADE TO ORDER SIZES CAN BE SHIPPED IN AS LITTLE AS 24 HOURS!

STANDARD PRESS BRAKE CONFIGURATIONS

90° FORMING

30° FORMING

OFFSET FORMING

FLATTENING

SHEARING

GOOSENECK

STOCK ROUND PUNCHES & DIES FOR BATEMAN™ IRONWORKERS

● *Represents stock round sizes*

FIGURE NUMBER		
	Punches	Dies
Size	158	46
1/8	●	
5/32	●	●
3/16	●	●
7/32	●	●
1/4	●	●
9/32	●	●
5/16	●	●
11/32	●	●
3/8	●	●
13/32	●	●
7/16	●	●
15/32	●	●
1/2	●	●
17/32	●	●
9/16	●	●
19/32	●	●
5/8	●	●
21/32	●	●
11/16	●	●
23/32	●	●
3/4	●	●
25/32	●	●
13/16	●	●
27/32	●	●
7/8	●	●
29/32	●	●
15/16	●	●
31/32	●	●
1	●	●
1-1/32		●

F-158 Punch

IN STOCK

F-46 Die

IN STOCK

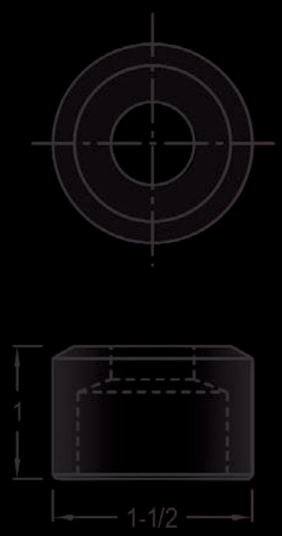

SQUARE PUNCHES & DIES

■ *Represents square stock sizes*

FIGURE NUMBER		
	Punches	Dies
Size	158	46
7/32	■	
1/4	■	■
9/32	■	■
5/16	■	■
11/32		■
3/8	■	■
13/32	■	■
7/16	■	■
15/32	■	■
1/2	■	■
17/32	■	■
9/16	■	■
19/32	■	■
5/8	■	■
21/32	■	■
11/16	■	■
23/32		■
3/4	■	■
25/32	■	■
13/16		■

F-158 Punch

IN STOCK

F-46 Die

IN STOCK

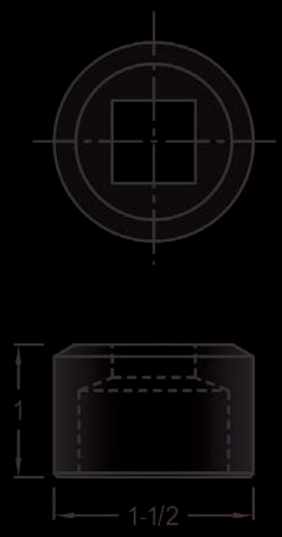

BATEMAN™/LEHMAN™

Dimensions & Specifications

This page illustrates our most commonly used punches and dies for Buffalo™ Ironworkers. Refer to our **Cross Reference Catalog** for the proper tooling to fit your machine.

STOCK PUNCHES & DIES ARE SHIPPED THE SAME DAY ORDERED!
****MADE TO ORDER SIZES CAN BE SHIPPED IN AS LITTLE AS 24 HOURS!***

BUFFALO™ TOOLING

ATTENTION: SEE OUR BUFFALO™ BROCHURE
For Stock Sizes and Specifications.

F-9 (362)
IN STOCK

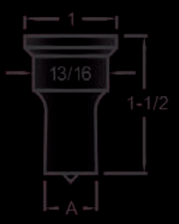

F-664
IN STOCK

F-20 (903)
IN STOCK

F-3T-10220
IN STOCK

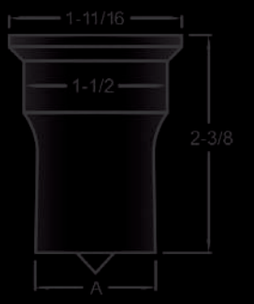

F-200
IN STOCK

F-201
IN STOCK

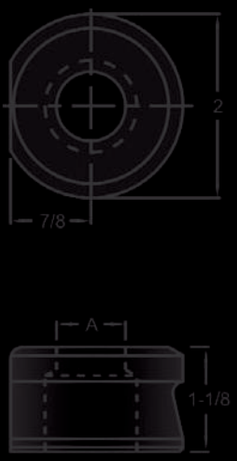

F-202
IN STOCK

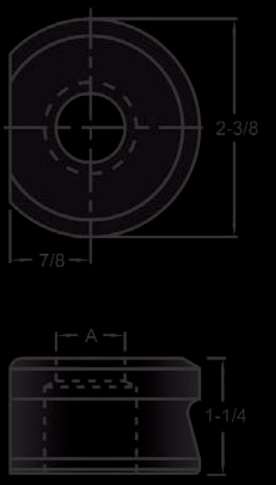

F-203
IN STOCK

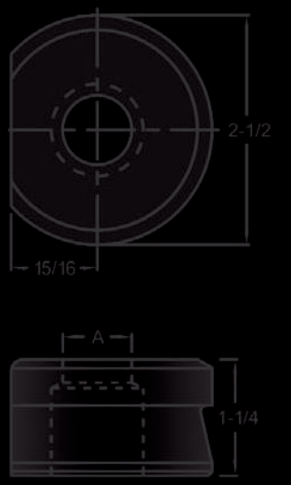

Triple Punch Attachment Middle Die*

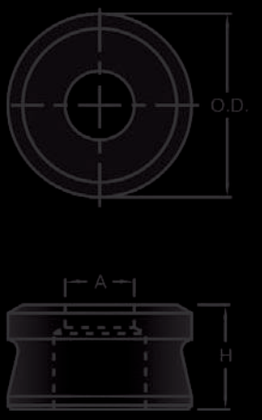

Triple Punch Attachment Outer Die*

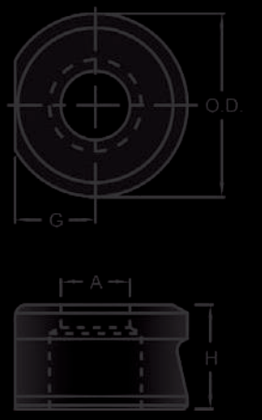

PLEASE NOTE:
Triple punch attachment dies are made to order. Kindly furnish the machine model and the dimensions indicated in the diagram or furnish a sketch or drawing.

BUFFALO™ BLADES

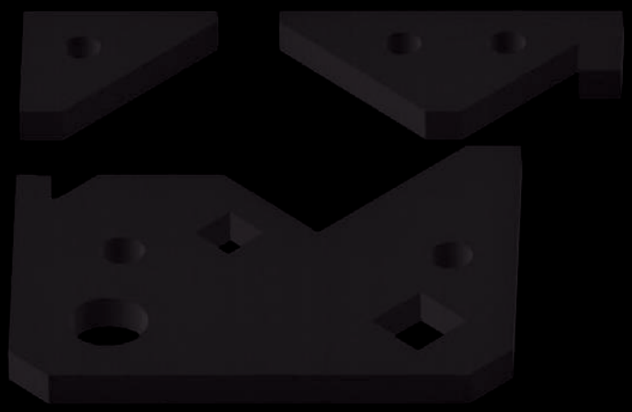

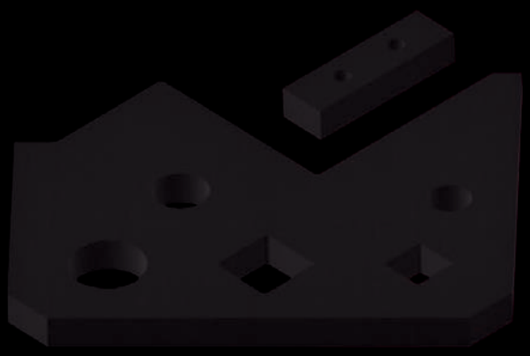

Frame Knives

IN STOCK

Serrated Shear Blade

IN STOCK

Plain Shear Blade

IN STOCK

Non-Deforming Upper Shear Blade

IN STOCK

Buffalo™ Coper/Notchers, Punch Stems and Coupling Nuts

This page illustrates our stock Buffalo™ coper/notching blades, punch stems and coupling nuts. Please provide the model and serial number when ordering replacement blades. If the blade required is not listed, kindly furnish a part number, sketch or drawing.

STOCK PUNCHES & DIES ARE SHIPPED THE SAME DAY ORDERED!

MADE TO ORDER SIZES CAN BE SHIPPED IN AS LITTLE AS 24 HOURS!

Coper Punch

Side Coper Dies (2 req.)

Front Coper Die

IN STOCK

Notcher Punch

Lower Notcher Die (2 req.)

IN STOCK

Single Punch Stem

IN STOCK

Triple Punch Stem

IN STOCK

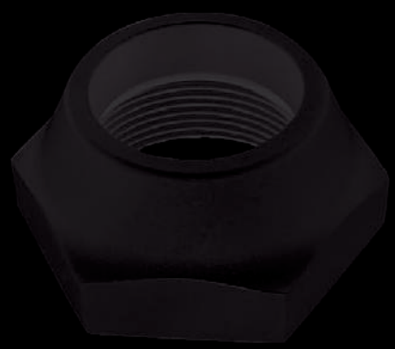

Coupling Nut

IN STOCK

CONTROLLED AUTOMATION™ TOOLING

ATTENTION: SEE OUR CONTROLLED AUTOMATION™ BROCHURE
For Stock Sizes and Specifications.

F-3T-10220
IN STOCK

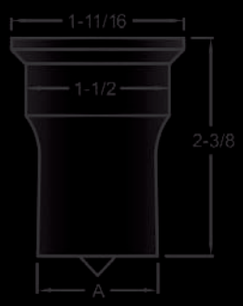

F-26
IN STOCK

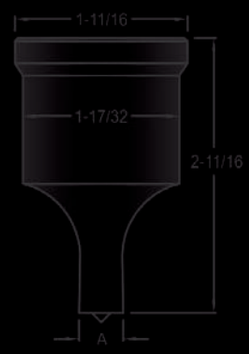

C-740
IN STOCK

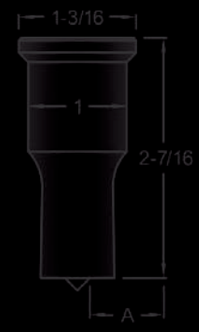

C-770
(C-272)
IN STOCK

C-7501*

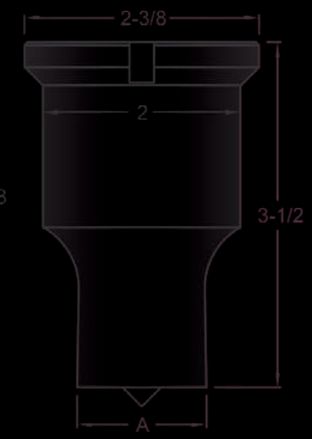

Stock C-272 punches are provided with keyways in the head.

C-740
IN STOCK

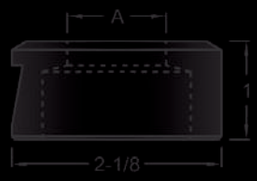

C-7502*

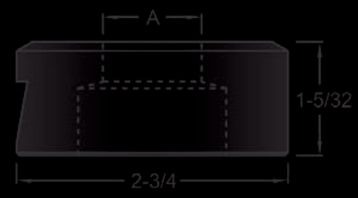

C-7602*

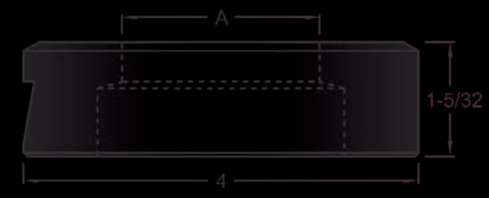

F-200
IN STOCK

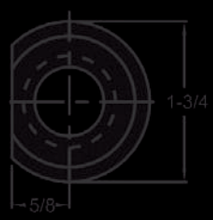

F-203
IN STOCK

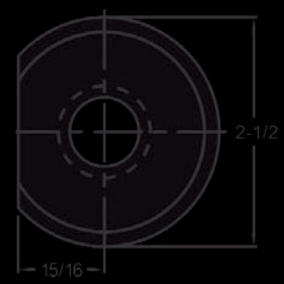

C-7501 STANDARD SHAPE CONFIGURATIONS

C-7502 STANDARD SHAPE CONFIGURATIONS

C-7602 STANDARD SHAPE CONFIGURATIONS

GREEN TEAM TIP:
*Punches last longer when used with a punch lubricant. For maximum punch life, use Cleveland Punch & Die's patented punch lubricant - **Punch Easy**.*

GREEN TEAM TIP:
The material thickness should not exceed the punch size (A Dim.).

Dimensions & Specifications

This page illustrates our most commonly used punches, dies and coupling nuts for Edwards™ Ironworkers. Refer to our **Cross Reference Catalog** for the proper tooling to fit your machine.

STOCK PUNCHES & DIES ARE SHIPPED THE SAME DAY ORDERED!

MADE TO ORDER SIZES CAN BE SHIPPED IN AS LITTLE AS 24 HOURS!

ATTENTION: SEE OUR EDWARDS™ BROCHURE
For Stock Sizes and Specifications.

F-16
IN STOCK

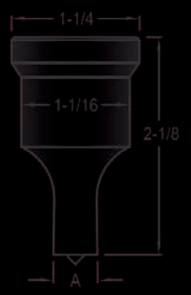

GREEN TEAM TIP:
The material thickness should not exceed the punch size (A Dim.).

F-26
IN STOCK

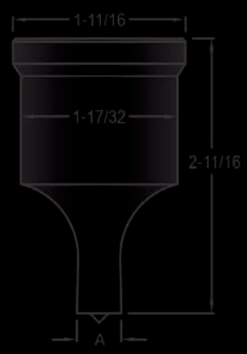

F-55
IN STOCK

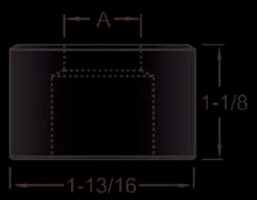

GREEN TEAM TIP:
Periodically check the inside seat of your die holder for metal chips & excessive wear.

F-62
IN STOCK

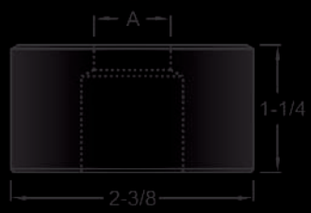

EDWARDS™ COUPLING NUT
CN EDW1
IN STOCK

CN-26A
IN STOCK

STOCK ROUND PUNCHES AND DIES FOR ENERPAC™ AND POWER TEAM™ PORTABLE HYDRAULIC PUNCHES

● *Represents stock round sizes*

FIGURE NUMBERS FOR 25 TON MACHINE

Size	Punches 5	Dies 44
3/16	●	
7/32		●
1/4	●	
9/32		●
5/16	●	
11/32		●
3/8	●	
13/32		●
7/16	●	
1/2	●	●
9/16	●	●
5/8	●	●
11/16	●	●
3/4	●	●
13/16	●	●
7/8		●

F-5 Punch

IN STOCK

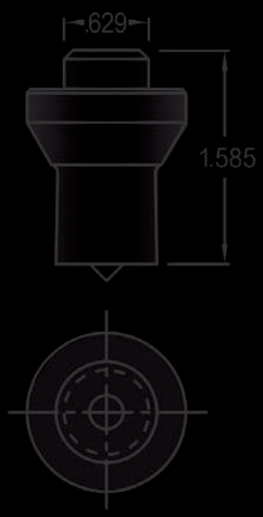

F-44 Die

IN STOCK

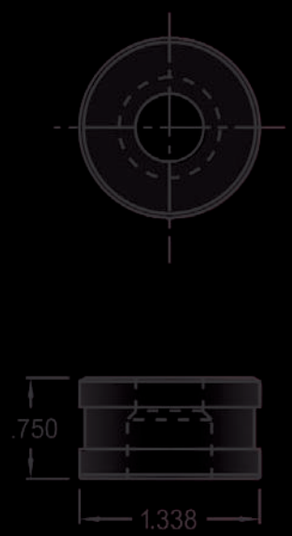

● *Represents stock round sizes*

FIGURE NUMBERS FOR 35 TON MACHINE

Size	Punches 9	Dies 43
1/8	●	
5/32	●	●
3/16	●	●
7/32	●	●
1/4	●	●
9/32	●	●
5/16	●	●
11/32	●	●
3/8	●	●
13/32	●	●
7/16	●	●
15/32	●	●
1/2	●	●
17/32	●	●
9/16	●	●
19/32	●	●
5/8	●	●
21/32	●	●
11/16	●	●
23/32	●	●
3/4	●	●
25/32	●	●
13/16	●	●
27/32		●
7/8		●

F-9 Punch

IN STOCK

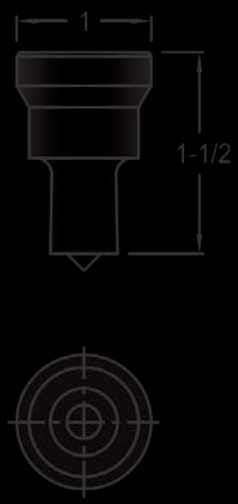

F-43 Die

IN STOCK

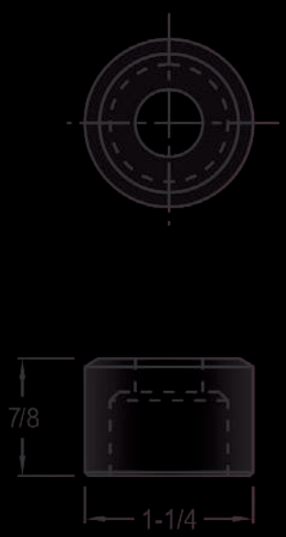

ENERPAC™/POWER TEAM™

Dimensions & Specifications

The following pages illustrate our most commonly used punches, dies and related tooling for Franklin Mfg.™ Machines. Refer to our **Cross Reference Catalog** for the proper tooling to fit your machine.

STOCK PUNCHES & DIES ARE SHIPPED THE SAME DAY ORDERED!

****MADE TO ORDER SIZES CAN BE SHIPPED IN AS LITTLE AS 24 HOURS!***

FRANKLIN MFG.™ TOOLING

ATTENTION: SEE OUR FRANKLIN MFG.™ BROCHURE

For Stock Sizes and Specifications.

C-740

IN STOCK

C-770 (C-272)

IN STOCK

C-770F* (C-272F*)

C-790F*

Stock C-272 punches are provided with keyways in the head.

C-FP1*

C-790FXL*

C-7501*

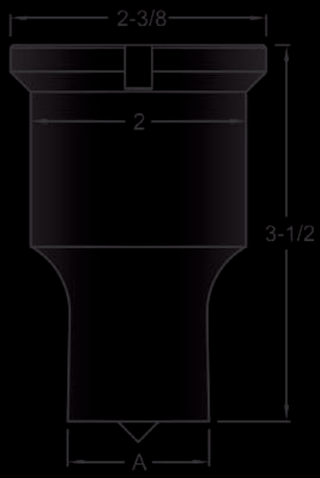

C-5250P*

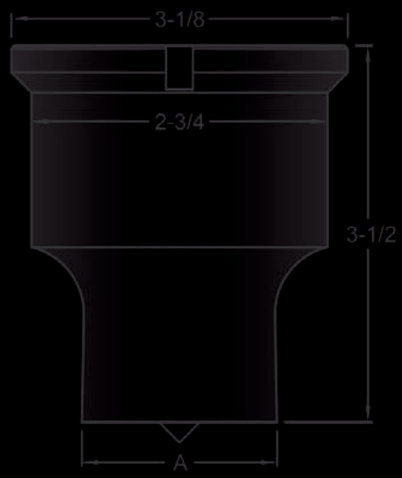

C-7501 STANDARD SHAPE CONFIGURATIONS

C-720
IN STOCK

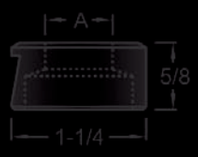

C-740
IN STOCK

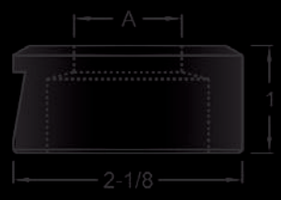

C-FD1*

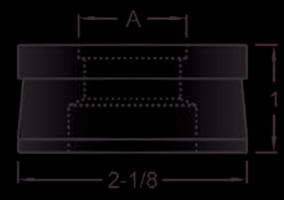

C-7502*

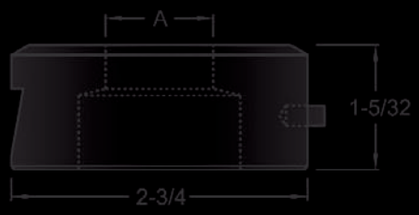

C-7602*
(C-5250D)

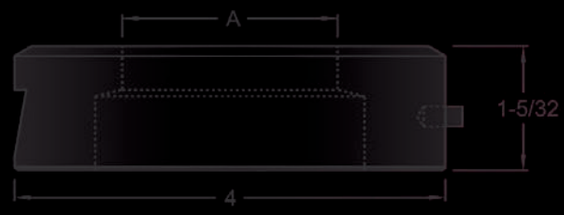

C-7502 STANDARD SHAPE CONFIGURATIONS

C-7602 STANDARD SHAPE CONFIGURATIONS

OSHA WARNING

It is the user's responsibility that the machine and **tooling** be set up and used in accordance with local and national OSHA Laws and ANSI B11.5 standards for safety.

Do not permit unqualified personnel to setup or operate the machine. Extreme care should be used at all times.

GEKA™ PUNCHES

Dimensions & Specifications

The following pages illustrate our most commonly used punches, dies and related tooling for Geka™ Ironworkers. Refer to our **Cross Reference Catalog** for the proper tooling to fit your machine.

STOCK PUNCHES & DIES ARE SHIPPED THE SAME DAY ORDERED!
****MADE TO ORDER SIZES CAN BE SHIPPED IN AS LITTLE AS 24 HOURS!***

ATTENTION: SEE OUR GEKA™ BROCHURE
For Stock Sizes and Specifications.

F-7
IN STOCK

F-16
IN STOCK

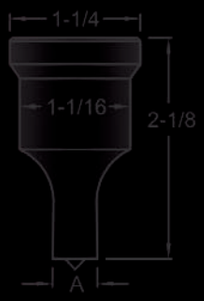

F-20
IN STOCK

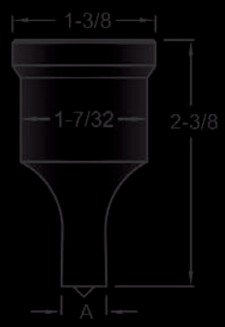

F-26
IN STOCK

F-26S
IN STOCK

F-GOS1
IN STOCK

F-GOS2
IN STOCK

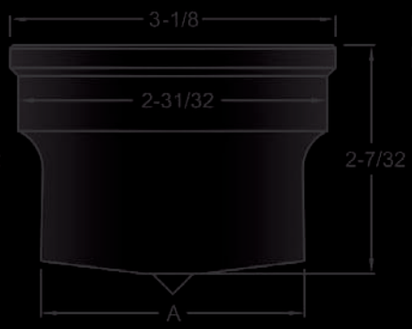

F-GOS3
IN STOCK

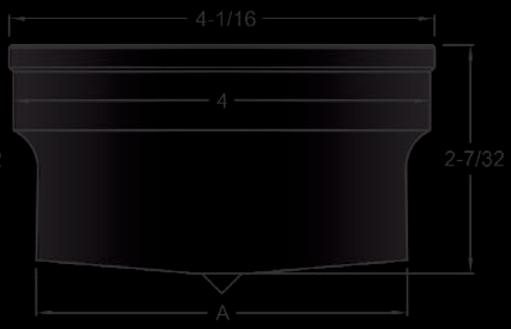

F-GOS4*
(Note: 6" Attachment Required)

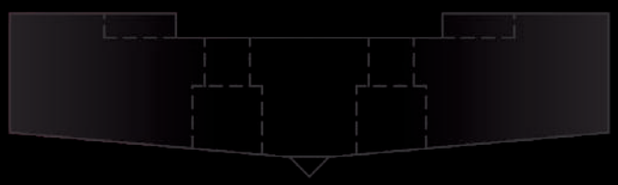

12 MM
Straight Shank
IN STOCK

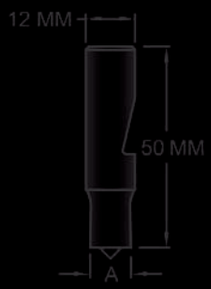

20 MM
Straight Shank*

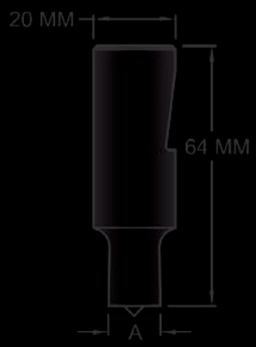

GREEN TEAM TIP:
*Punches last longer when used with a punch lubricant. For maximum punch life, use Cleveland Punch & Die's patented punch lubricant - **Punch Easy**.*

GEKA™ DIES

35 MM
IN STOCK

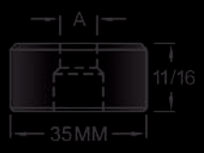

F-43
IN STOCK

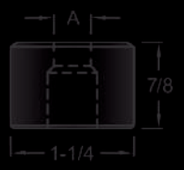

F-55
IN STOCK

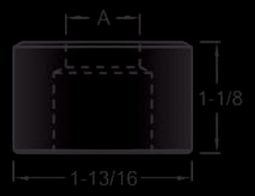

F-59
IN STOCK

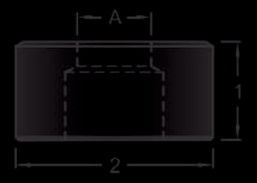

F-62
IN STOCK

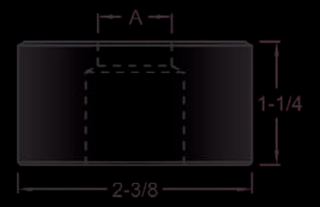

F-62S
IN STOCK

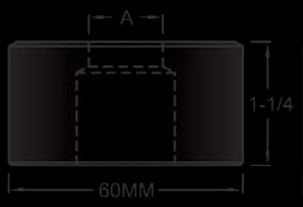

C-89
IN STOCK

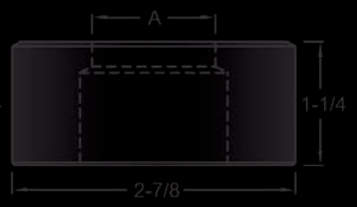

F-59 PAXY*

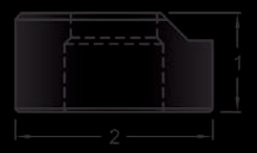

C-89 PAXY
IN STOCK

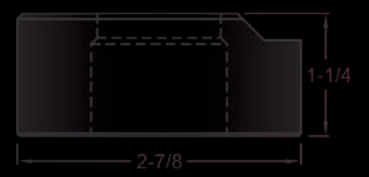

F-GOS1
IN STOCK

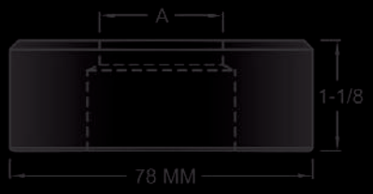

F-GOS3
IN STOCK

F-GOS2
IN STOCK

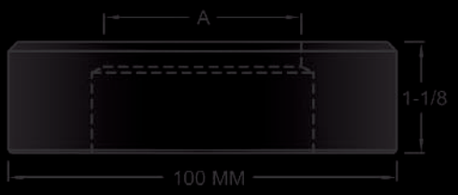

F-GOS4*

GREEN TEAM TIP:
Periodically check the inside seat of your die holder for metal chips & excessive wear.

HILL ACME™ PUNCHES

Dimensions & Specifications

This page illustrates our most commonly used punches and coupling nuts for Hill Acme™ Ironworkers. Refer to our **Cross Reference Catalog** for the proper tooling to fit your machine.

STOCK PUNCHES & DIES ARE SHIPPED THE SAME DAY ORDERED!

MADE TO ORDER SIZES CAN BE SHIPPED IN AS LITTLE AS 24 HOURS!

ATTENTION: SEE OUR HILL ACME™ BROCHURE
For Stock Sizes and Specifications.

F-7
IN STOCK

F-9
IN STOCK

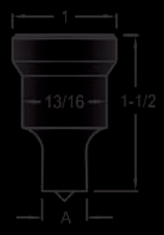

F-12
IN STOCK

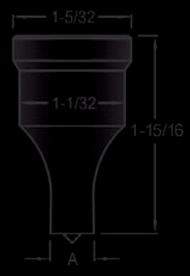

F-20
IN STOCK

F-26
IN STOCK

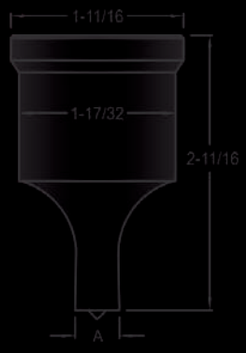

C-50
IN STOCK

COUPLING NUTS
IN STOCK

GREEN TEAM TIP:
*Punches last longer when used with a punch lubricant. For maximum punch life, use Cleveland Punch & Die's patented punch lubricant - **Punch Easy**.*

HILL ACME™ DIES

F-41
IN STOCK

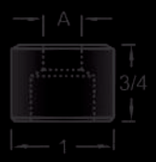

F-46
IN STOCK

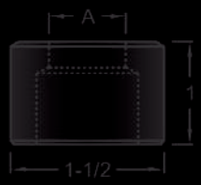

F-59
IN STOCK

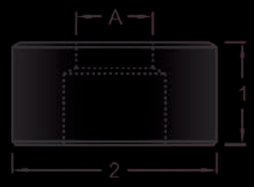

F-62
IN STOCK

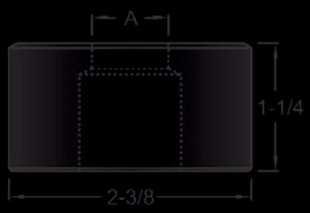

C-91MM
IN STOCK

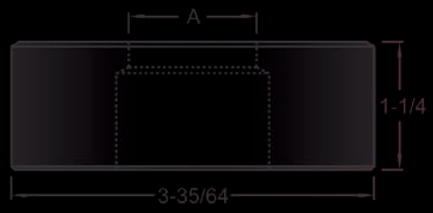

Shear Blades

OSHA WARNING

It is the user's responsibility that the machine and **tooling** be set up and used in accordance with local and national OSHA Laws and ANSI B11.5 standards for safety.

Do not permit unqualified personnel to setup or operate the machine. Extreme care should be used at all times.

HOUGEN™-OGURA™ TOOLING

Dimensions & Specifications

This page illustrates our most commonly used punches and dies for Hougen™ -Ogura™ Machines. All tooling listed on this page is made to order. Refer to our **Cross Reference Catalog** for the proper tooling to fit your machine.

STOCK PUNCHES & DIES ARE SHIPPED THE SAME DAY ORDERED!

****MADE TO ORDER SIZES CAN BE SHIPPED IN AS LITTLE AS 24 HOURS!***

C-001*
Punch

C-002*
Punch

C-003*
Punch

***Made to order sizes can be shipped in as little as 24 hours!**

C-001*
Die

C-002*
Die

C-003*
Die

C-004*
Punch

C-005*
Punch

C-006*
Punch

C-004*
Die

C-005*
Die

C-006*
Die

ATTENTION: SEE OUR KINGSLAND™ BROCHURE
For Stock Sizes and Specifications.

F-20
IN STOCK

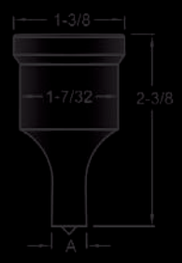

F-26
IN STOCK

C-50
IN STOCK

Fig. No. 9010*

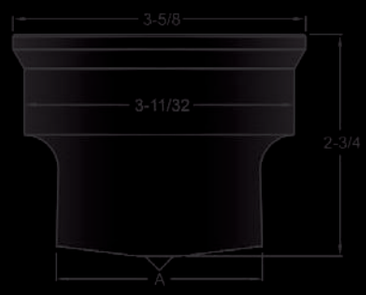

Fig. No. 9011*

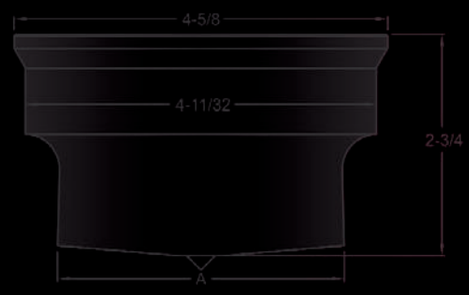

F-59
IN STOCK

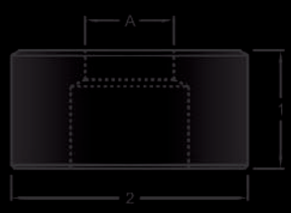

F-62
IN STOCK

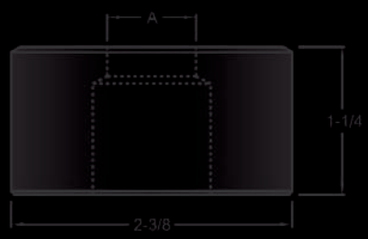

F-9024*

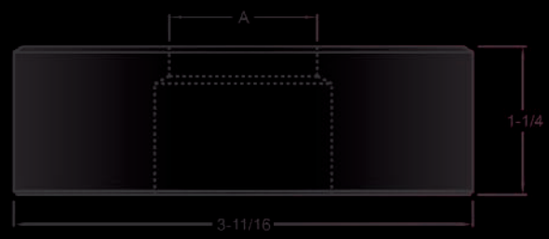

F-9025*

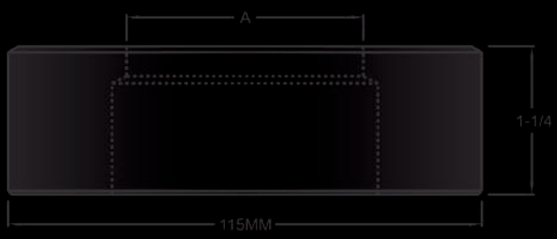

F-9026*

KINGSLAND™ TOOLING

MUBEA™ TOOLING

Dimensions & Specifications

This page illustrates our commonly used punches, dies and related tooling for Mubea™ Ironworkers. Refer to our **Cross Reference Catalog** for the proper tooling to fit your machine.

STOCK PUNCHES & DIES ARE SHIPPED THE SAME DAY ORDERED!
****MADE TO ORDER SIZES CAN BE SHIPPED IN AS LITTLE AS 24 HOURS!***

BF-10*

H-1
IN STOCK

H-2
IN STOCK

H-3*

H-4*

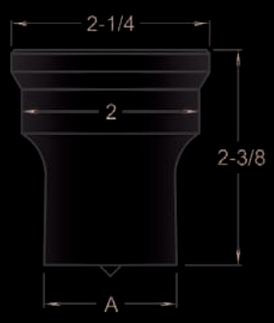

H-5*

GREEN TEAM TIP:
*H-1, H-2, H-3, and H-4 shaped punches require a **round**, K7 key to provide anti-rotational movement. K7 keys can be shipped from stock.*

H-3 to H-2 Mubea™ Punch Reducing Sleeve
IN STOCK

V-GROOVE

V-GROOVE IN HEAD OF PUNCH

H-1 and H-2 oblong punches are stocked with a V-Groove in the head of the punch.

ATTENTION: SEE OUR MUBEA™ BROCHURE
For Stock Sizes and Specifications.

H-1
IN STOCK

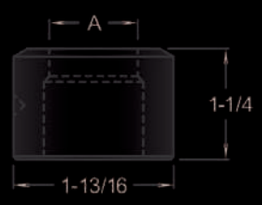

H-2
IN STOCK

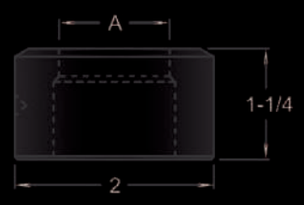

H-3*

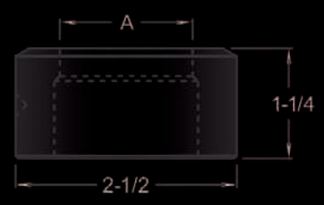

H-4*

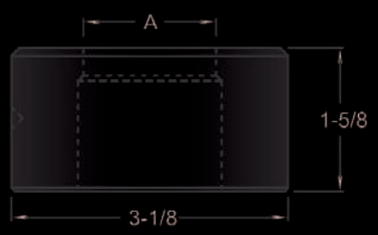

H-5*

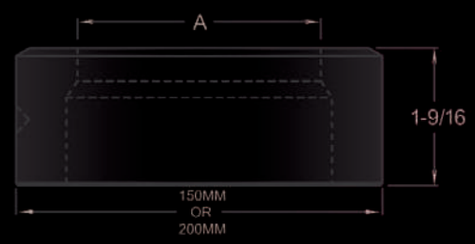

Mubea™ CN-H1 Coupling Nut
IN STOCK

STOCK MUBEA™ DIES ROUND AND OBLONG

DRILL SPOTS

DRILL SPOT LOCATORS
H-1 and H-2 oblong dies are stocked with two drill spot locators indexed at 90˚.

MUBEA™ TOOLING

The following table lists our stock round punches and dies for Nitto Kohki™ portable hydraulic punching machines. Refer to our **Cross Reference Catalog** for the proper tooling to fit your machine.

STOCK PUNCHES & DIES ARE SHIPPED THE SAME DAY ORDERED!

****MADE TO ORDER SIZES CAN BE SHIPPED IN AS LITTLE AS 24 HOURS!***

NITTO KOHKI™

STOCK ROUND PUNCHES AND DIES FOR NITTO KOHKI™ PORTABLE HYDRAULIC PUNCHES

● *Represents stock round sizes*

	FIGURE NUMBER	
	Punches	Dies
Size	13	51
1/4	●	
9/32		●
5/16	●	
11/32		●
3/8	●	
13/32		●
7/16	●	
15/32		●
1/2	●	
17/32		●
9/16	●	●
19/32		●
5/8	●	●
21/32		●
11/16	●	●
23/32		●
3/4	●	●
25/32		●
13/16	●	●
27/32		●
7/8	●	●
29/32		●
15/16	●	●
31/32		●
1		●

F-13 Punch

IN STOCK

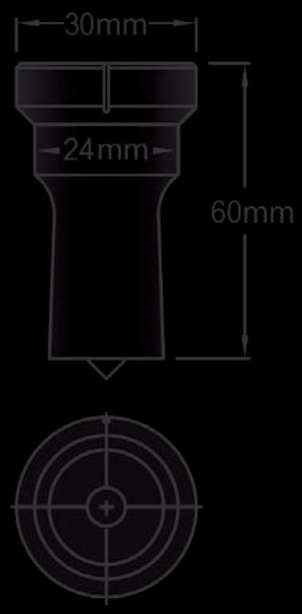

F-51 Die

IN STOCK

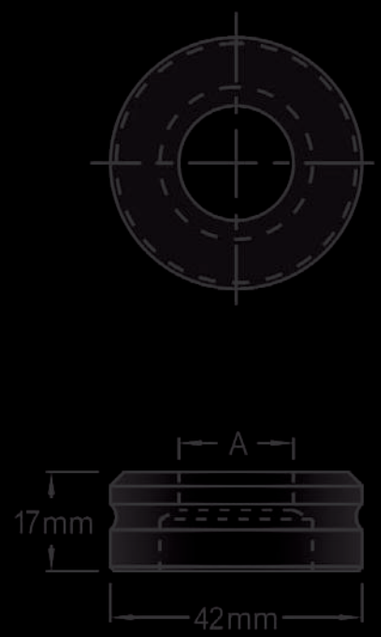

*MADE TO ORDER NITTO KOHKI™ PUNCHES & DIES FOR MODELS A05-1018 & S06-0318

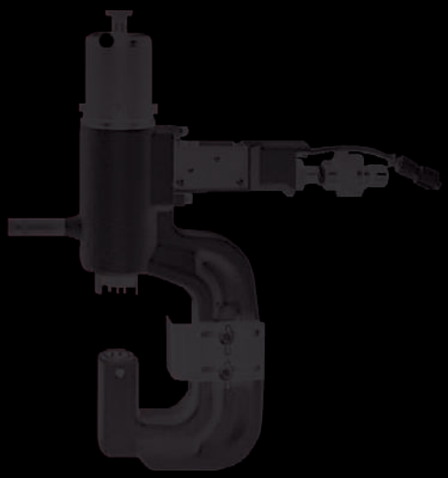

Mini-Punch*

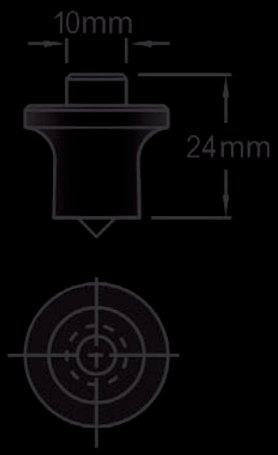

F-48 Die*

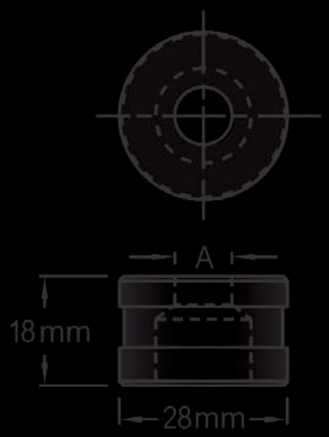

PEDDINGHAUS™ IRONWORKER TOOLING

F-12
IN STOCK

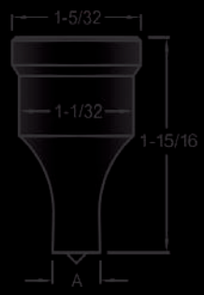

F-20
IN STOCK

F-26
IN STOCK

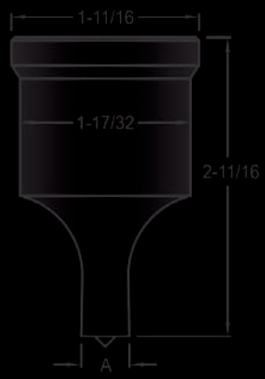

C-50
IN STOCK

PEDD No. 11*

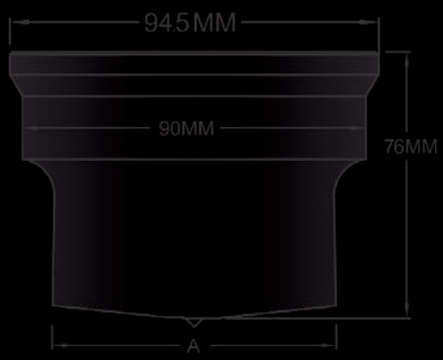

COUPLING NUT
IN STOCK

PEDD No. 20*

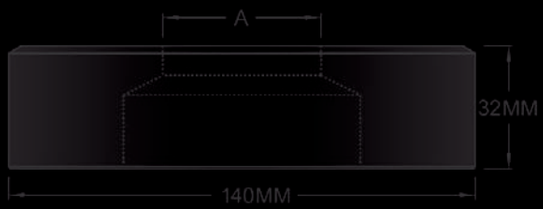

QUICK CHANGE SLEEVE
IN STOCK

F-55
IN STOCK

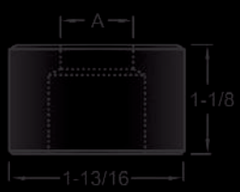

F-59
IN STOCK

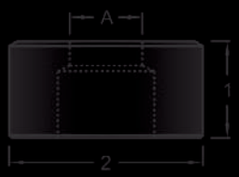

F-62
IN STOCK

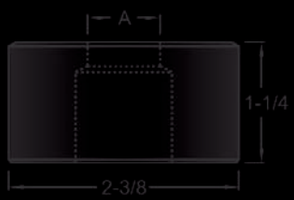

C-91MM
IN STOCK

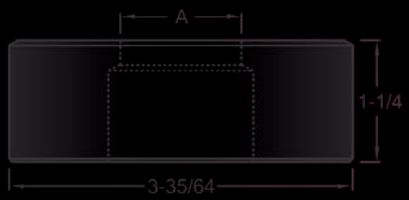

PEDDINGHAUS™ PUNCHES

Dimensions & Specifications

These pages illustrate our most commonly used Peddinghaus™ and Fabriline™ punches and dies. Refer to our **Cross Reference Catalog** for the proper tooling to fit your machine.

STOCK PUNCHES & DIES ARE SHIPPED THE SAME DAY ORDERED!
****MADE TO ORDER SIZES CAN BE SHIPPED IN AS LITTLE AS 24 HOURS!***

ATTENTION: SEE OUR PEDDINGHAUS™ BROCHURE
For Stock Sizes and Specifications.

C-232
(C-710)
IN STOCK

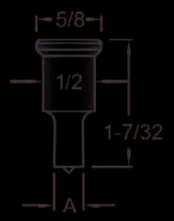

C-242
(C-720)
IN STOCK

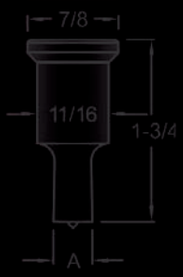

C-252
(C-740)
IN STOCK

Stock C-272 punches are provided with keyways in the head.

C-272
(C-770)
IN STOCK

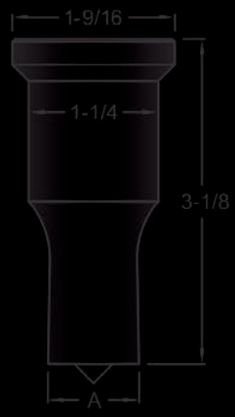

C-274
IN STOCK

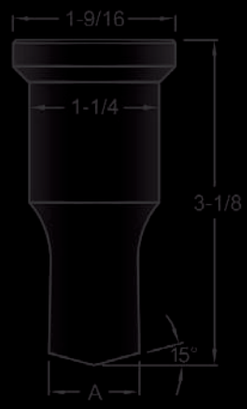

C-282
IN STOCK

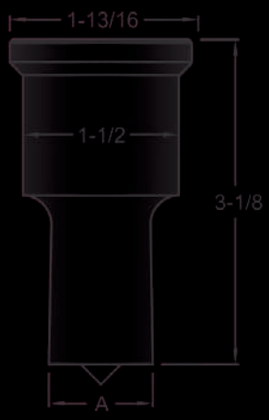

C-292
IN STOCK

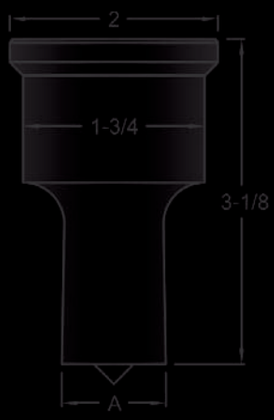

C-400*

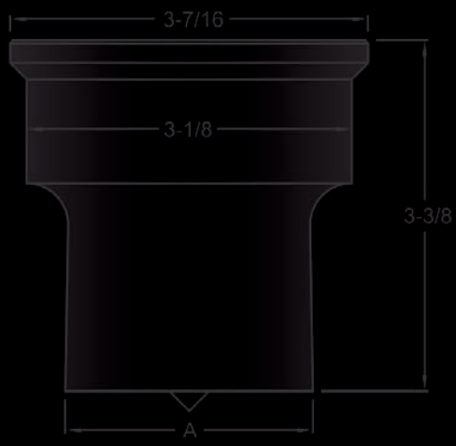

C-PFP3*

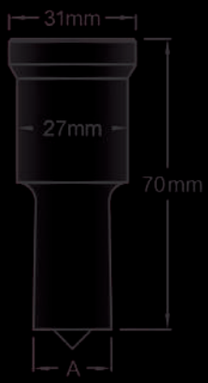

GREEN TEAM TIP:
*Punches last longer when used with a punch lubricant. For maximum punch life, use Cleveland Punch & Die's patented punch lubricant - **Punch Easy**.*

PLEASE NOTE: Fabriline™ is a division of Peddinghaus™ Corporation.

PEDDINGHAUS™ DIES

C-231
(C-710, 231-A3)
IN STOCK

C-241
(C-720, 241-A3)
IN STOCK

C-271
(C-740, 271-A3)
IN STOCK

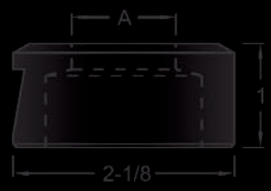

C-273
(271-B3)
IN STOCK

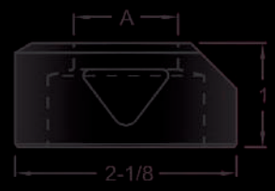

C-271F
(271-A4)
IN STOCK

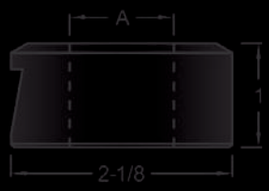

C-275F
(271-B4)
IN STOCK

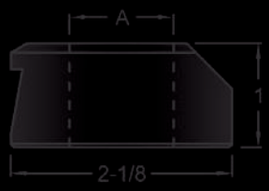

C-291F
(281-A4)
IN STOCK

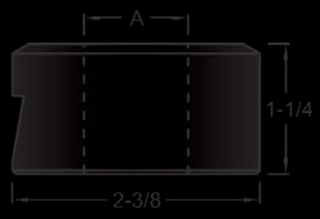

C-293F
(281-B4)
IN STOCK

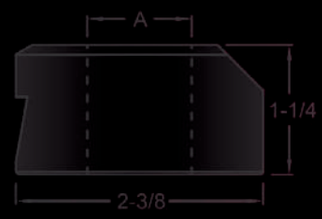

C-291FS
(291-A3)
IN STOCK

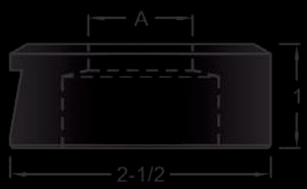

C-400*

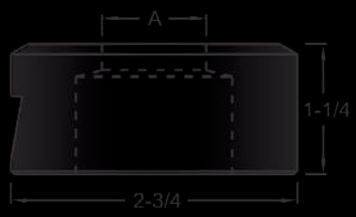

C-403*

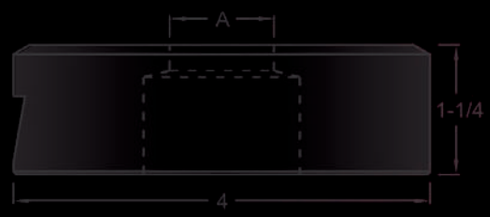

C-PFP3*
(131-B3)

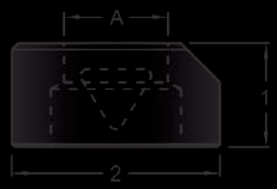

C-281
(271-C3)
IN STOCK

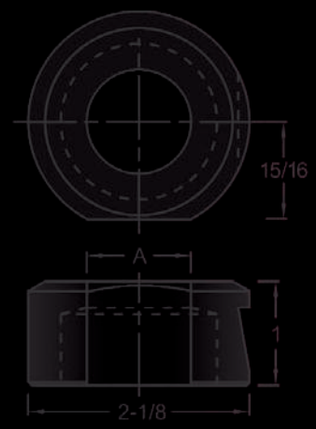

GREEN TEAM TIP:
Periodically check the inside seat of your die holder for metal chips and excessive wear.

PIRANHA™ TOOLING

Piranha™ Punches & Dies Dimensions & Specifications

This page illustrates our most commonly used punches and dies for Piranha™ Ironworkers. Refer to our **Cross Reference Catalog** for the proper tooling to fit your machine.

STOCK PUNCHES & DIES ARE SHIPPED THE SAME DAY ORDERED!

****MADE TO ORDER SIZES CAN BE SHIPPED IN AS LITTLE AS 24 HOURS!***

F-16

IN STOCK

F-26

IN STOCK

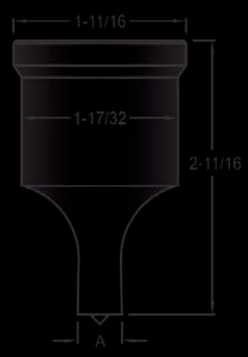

PIRANHA™ HEAVY DUTY PUNCHES*

Threaded Style

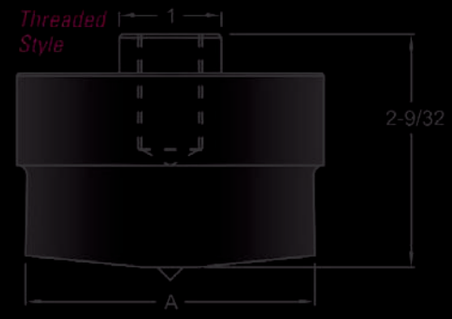

Bolt On Style

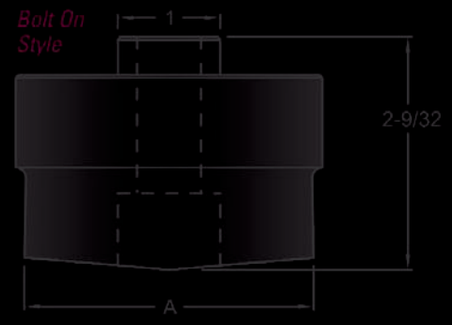

F-55

IN STOCK

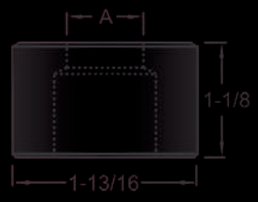

F-62

IN STOCK

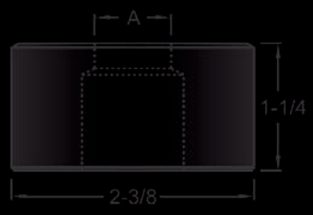

UPPER COPER

LOWER COPER-SIDE

2 Required

LOWER COPER-FRONT

Piranha™ Copers & Coupling Nuts

This page illustrates our stock Piranha™ coper tooling and coupling nuts. Please provide the model and serial number when ordering replacement blades. If the blade required is not listed, kindly furnish a part number, sketch or drawing.

PIRANHA™

CN-56 Coupling Nut

IN STOCK

PIRANHA™

CN-26A Coupling Nut

IN STOCK

PIRANHA™

CN-26P Coupling Nut

IN STOCK

PIRANHA™ PARTS

ATTENTION: SEE OUR PIRANHA™ BROCHURE
For Stock Sizes and Specifications.

Piranha™ Urethane Strippers, Filter Elements, Die Holders, Punch Stems and Shear Blades.

We stock Piranha™ urethane strippers, filter elements, die holders, punch stems, and shear blades. Please provide the model and serial number when ordering replacement blades. If the part required is not listed, kindly furnish a part number, sketch or drawing.

URETHANE STRIPPERS

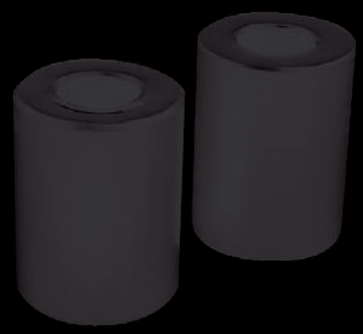

FILTER ELEMENT

DIE HOLDER

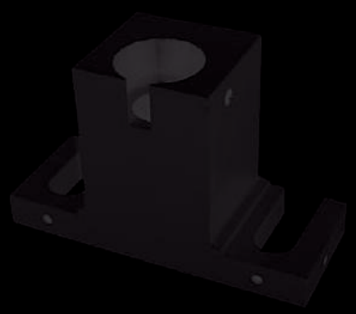

PUNCH STEMS

LONG SHEAR BLADE
2 Required

SHORT SHEAR BLADE
2 Required

UPPER ANGLE BLADE

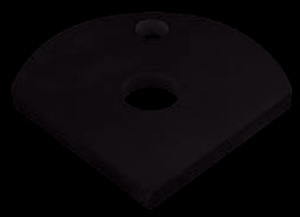

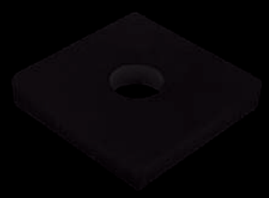

LOWER ANGLE BLADE
2 Required

Dimensions & Specifications

These pages illustrate our most commonly used punches and dies for Scotchman™ and Uni-Hydro™ Ironworkers. Refer to our **Cross Reference Catalog** for the proper tooling to fit your machine.

STOCK PUNCHES & DIES ARE SHIPPED THE SAME DAY ORDERED!

****MADE TO ORDER SIZES CAN BE SHIPPED IN AS LITTLE AS 24 HOURS!***

SCOTCHMAN™/UNI-HYDRO™

ATTENTION: SEE OUR SCOTCHMAN™/UNI-HYDRO™ BROCHURE

For Stock Sizes and Specifications.

SR-20

IN STOCK

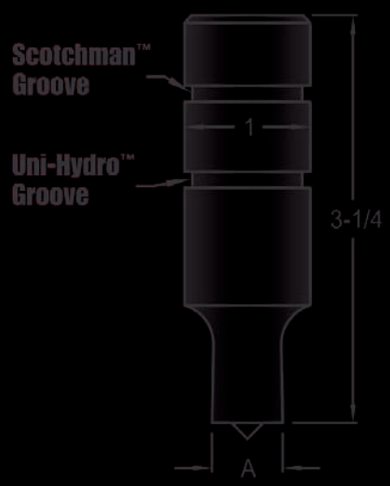

SR-20K*

(Rounds)

IN STOCK

SR-20K

(Shapes)

OBLONGS IN STOCK

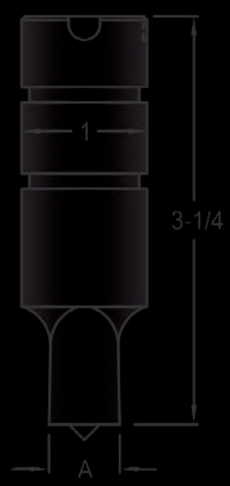

SR-150*

SAFETY WARNING!!!

Scotchman™ machines manufactured after March 1, 2000 MUST USE SR-20K STYLE PUNCH.
(Snap ring style punches only.)

F-20

IN STOCK

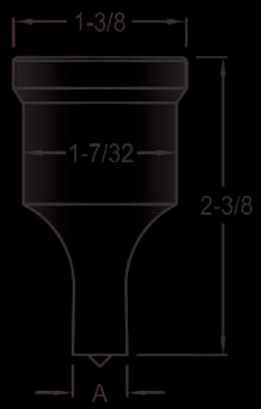

F-26

IN STOCK

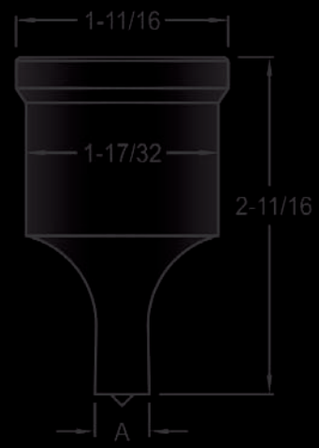

SR-200*

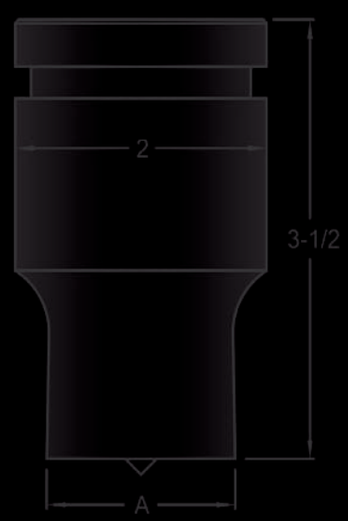

SCOTCHMAN™/UNI-HYDRO™

F-155
IN STOCK

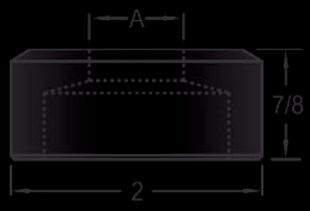

F-59
IN STOCK

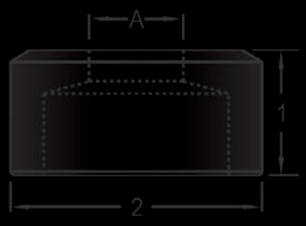

F-65
IN STOCK

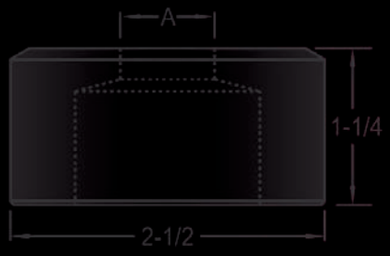

F-71*

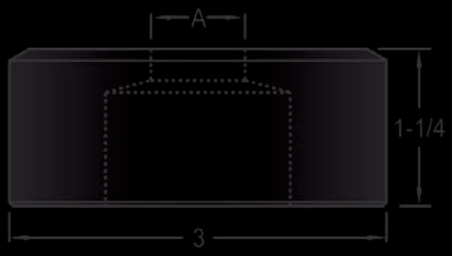

C-91MM
IN STOCK

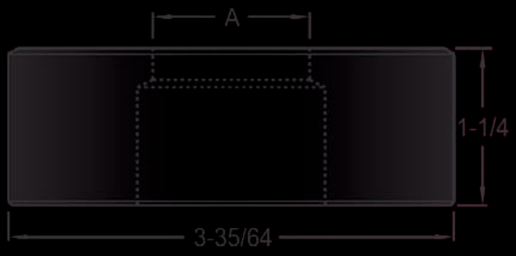

Scotchman™ 6 x 6*

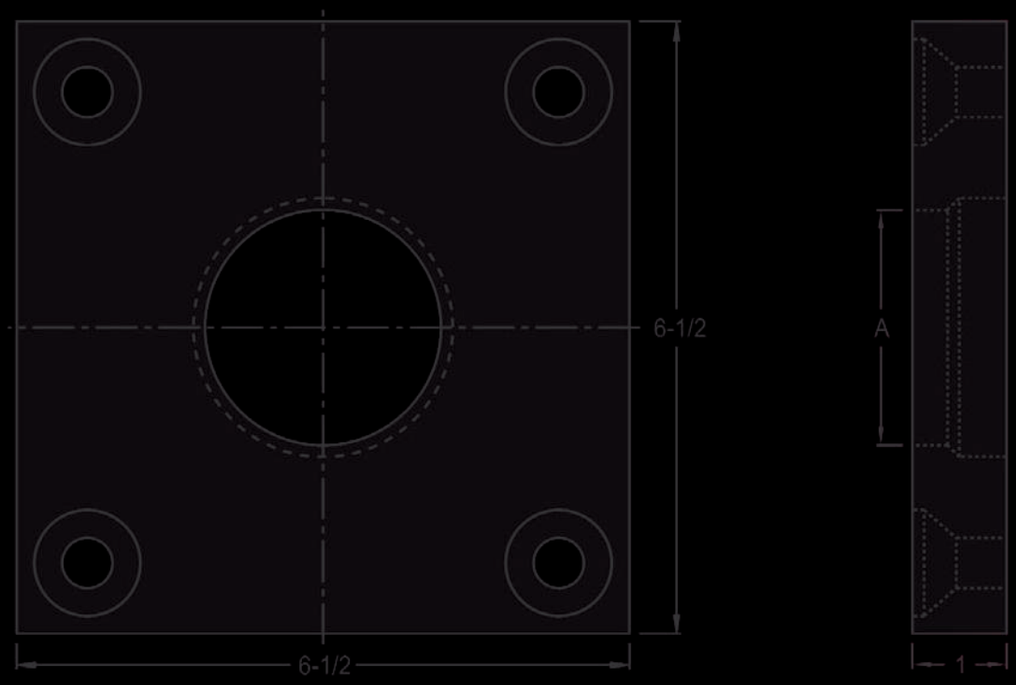

SPARTAN™ PUNCHES

Dimensions & Specifications

These pages illustrate our most commonly used punches, dies and related tooling for Spartan™ Ironworkers. Refer to our **Cross Reference Catalog** for the proper tooling to fit your machine.

STOCK PUNCHES & DIES ARE SHIPPED THE SAME DAY ORDERED!
****MADE TO ORDER SIZES CAN BE SHIPPED IN AS LITTLE AS 24 HOURS!***

ATTENTION: SEE OUR SPARTAN™ BROCHURE
For Stock Sizes and Specifications.

F-16
IN STOCK

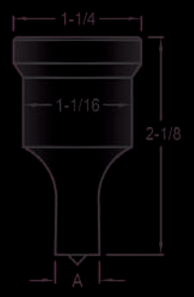

F-20
IN STOCK

F-26
IN STOCK

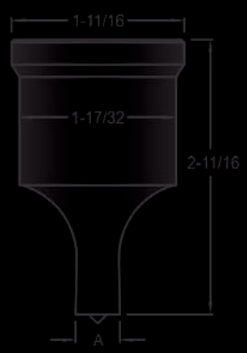

SP51P*

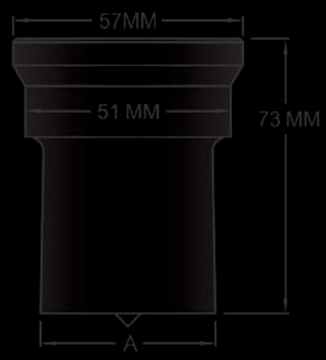

SP60P*

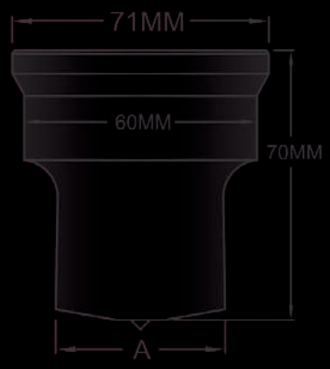

SP80P*

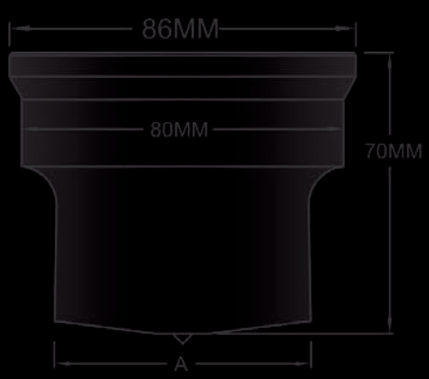

SP90P*

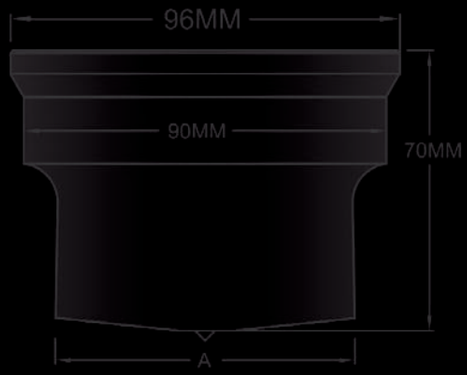

SP100P*

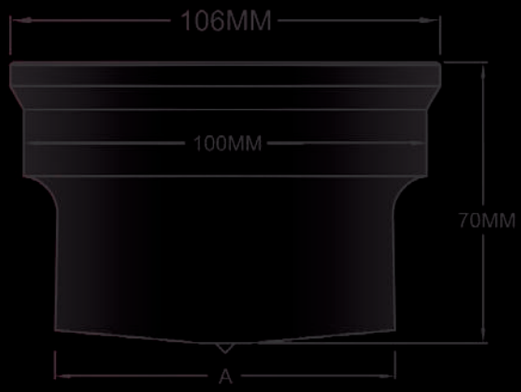

SP100PBO*

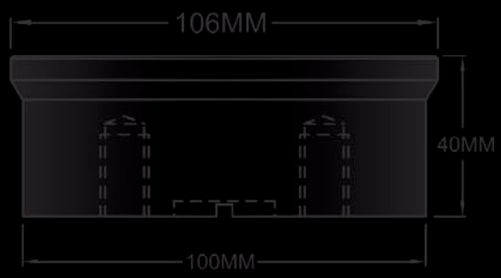

SP100PEO*

GREEN TEAM TIP:
*Punches last longer when used with a punch lubricant. For maximum punch life, use Cleveland Punch & Die's patented punch lubricant - **Punch Easy**.*

SPARTAN™ DIES

F-55
IN STOCK

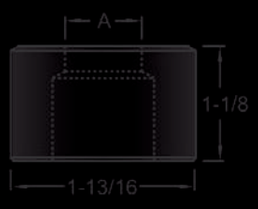

F-62
IN STOCK

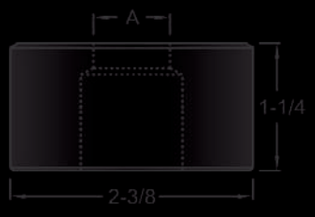

SP80D*

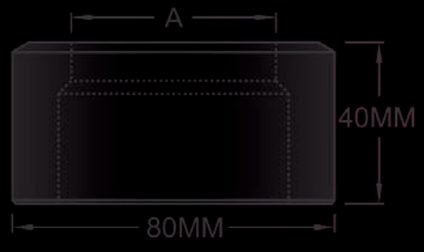

SP110D*

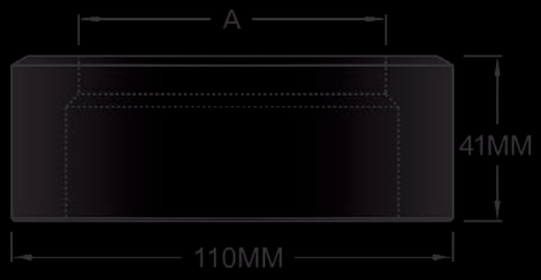

SP150D*

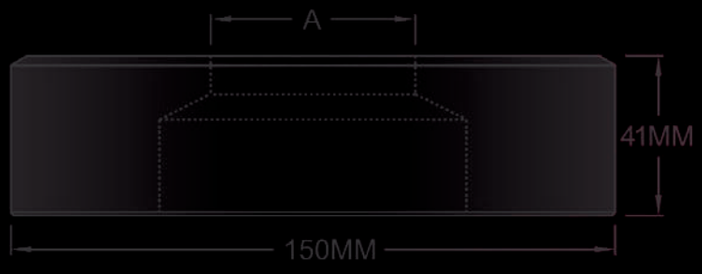

GREEN TEAM TIP: *Periodically check the inside seat of your die holder for metal chips & excessive wear.*

SP200D*

SP250D*

Dimensions & Specifications

This page illustrates our most commonly used punches, dies and related tooling for W.A. Whitney™ Machines. Refer to our **Cross Reference Catalog** for the proper tooling to fit your machine.

STOCK PUNCHES & DIES ARE SHIPPED THE SAME DAY ORDERED!
****MADE TO ORDER SIZES CAN BE SHIPPED IN AS LITTLE AS 24 HOURS!***

W.A. WHITNEY™ TOOLING

ATTENTION: SEE OUR W.A. WHITNEY™ BROCHURE
For Stock Sizes and Specifications.

C-710
IN STOCK

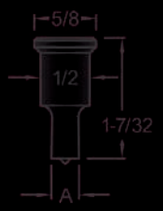

C-720
IN STOCK

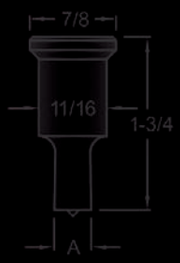

C-740
IN STOCK

C-770
IN STOCK

C-790XX*

C-7501*

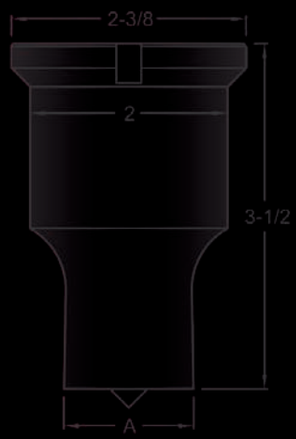

C-7502*

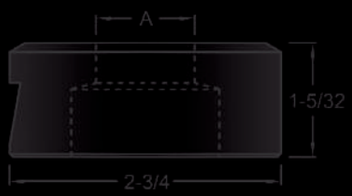

C-7602*

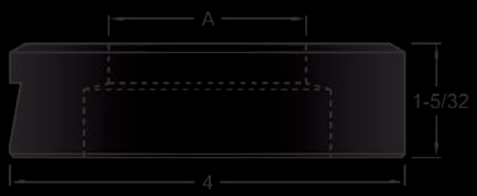

C-7501 STANDARD SHAPE CONFIGURATIONS

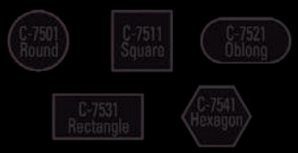

C-7502 STANDARD SHAPE CONFIGURATIONS

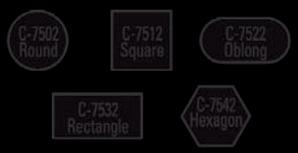

C-7602 STANDARD SHAPE CONFIGURATIONS

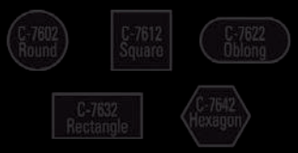

C-710
IN STOCK

C-720
IN STOCK

C-740
IN STOCK

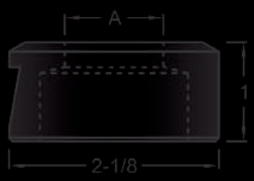

C-790XX*

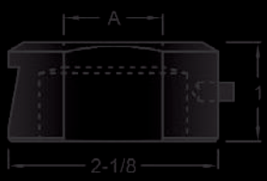

W.A. Whitney is a Trademark of MegaFab, Cleveland Punch and Die Company is not affiliated nor related to MegaFab. Cleveland Punch and Die Products are not endorsed or warranted by MegaFab.

WHITNEY™ SHEAR BLADES

The following table lists our stock Whitney™ shear blades. If the blade required is not listed, please furnish a part number, sketch or drawing.

C-606-008
IN STOCK

C-606-010
IN STOCK

C-606-013
IN STOCK

C-609-004
IN STOCK

C-609-039
IN STOCK

C-609-040
IN STOCK

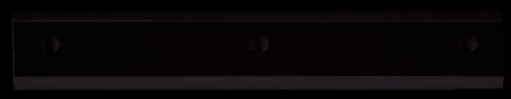

C-609-089
IN STOCK

GREEN TEAM TIP:
*Shear blades last longer when used with a lubricant. For maximum blade life, use Cleveland Punch & Die's patented blade lubricant - **Punch Easy** for all your shear blade requirements.*

Figure No.	Description	No. Required
C-606-008	Upper Angle Shear Blade	1
C-606-010	Lower Left Angle Shear Blade	2
C-606-013	Lower Right Angle Shear Blade	2
C-609-004	Upper Angle Shear Blade	1
C-609-039	Lower Left Angle Shear Blade	2
C-609-040	Lower Right Angle Shear Blade	2
C-609-089	Plate and Bar Shear Blade	2

W. A. Whitney is a Trademark of MegaFab. Cleveland Punch and Die Company is not affiliated nor related to MegaFab. Cleveland Punch and Die Products are not endorsed or warranted by MegaFab.

28XX ROUND TOOLING

F-2800
IN STOCK

Sizes .062 to 1.000

F-2801
IN STOCK

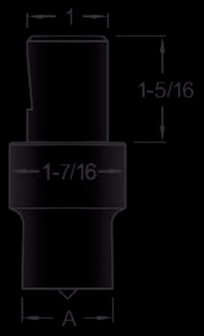

Sizes 1.001 to 1.437

F-2802
IN STOCK

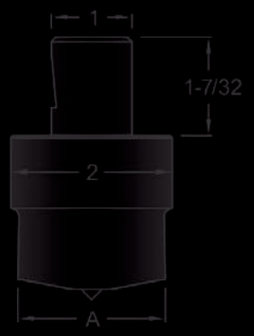

Sizes 1.438 to 2.000

F-2803
IN STOCK

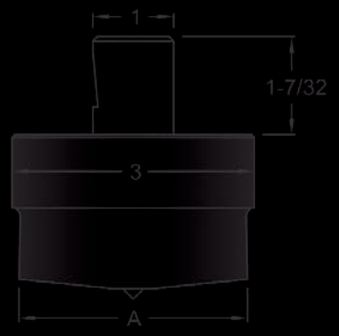

Sizes 2.001 to 3.000

All punches, tip (point) sizes greater than 1-7/16" are provided with a house top shear and center point. Other shear types are available. For assistance, please contact one of our Green Team Customer Service representatives.

F-2804
IN STOCK

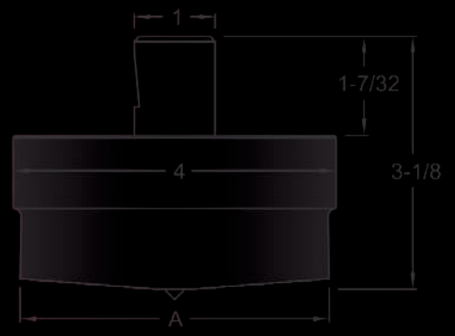

Sizes 3.001 to 4.000

F-2805
IN STOCK

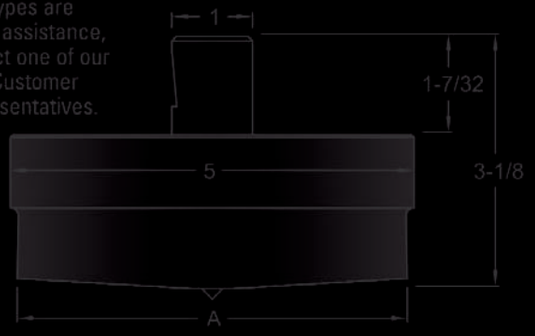

Sizes 4.001 to 5.000

F-2810
IN STOCK

F-2811
IN STOCK

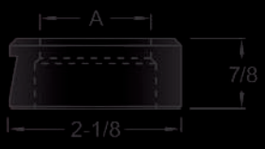

F-2812
IN STOCK

F-2813
IN STOCK

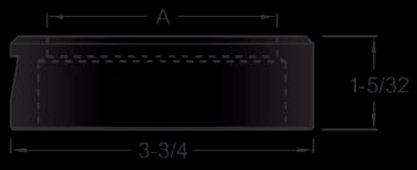

F-2814
IN STOCK

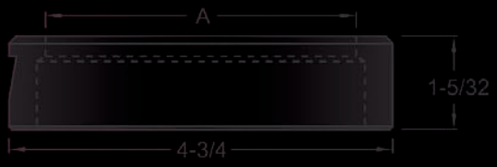

F-2815
IN STOCK

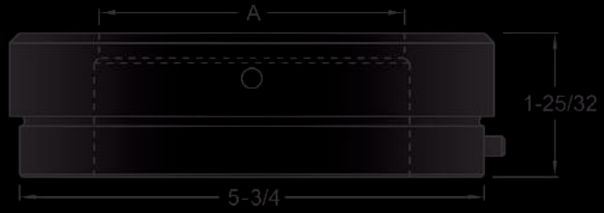

W. A. Whitney is a Trademark of MegaFab. Cleveland Punch and Die Company is not affiliated nor related to MegaFab. Cleveland Punch and Die Products are not endorsed or warranted by MegaFab.

28XX SHAPED TOOLING

28XX tooling is rated at a maximum of 50 tons.

F-2820*

Sizes .062 to 1.000

F-2821*

Sizes 1.001 to 1.437

F-2822*

Sizes 1.438 to 2.000

F-2823*

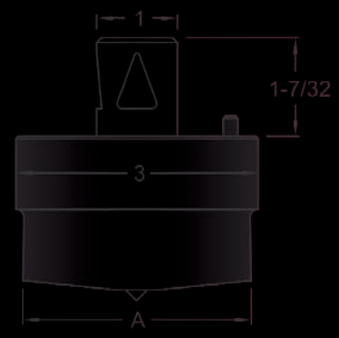

Sizes 2.001 to 3.000

F-2824*

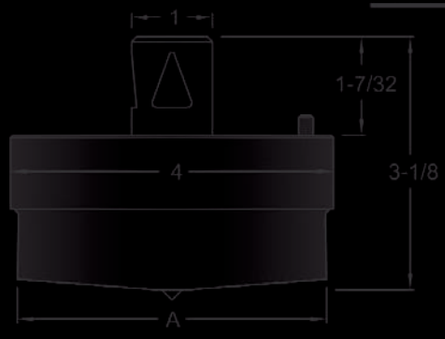

Sizes 3.001 to 4.000

F-2825*

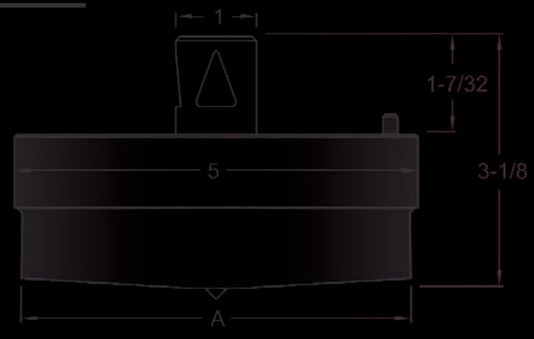

Sizes 4.001 to 5.000

F-2830*

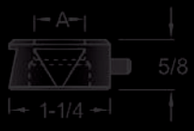

F-2831*

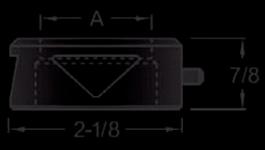

F-2832*

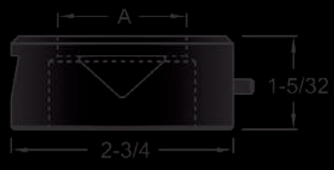

F-2833*

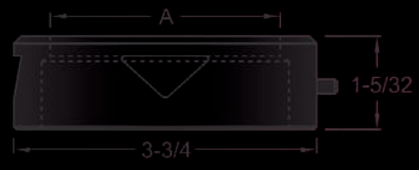

F-2834*

F-2835*

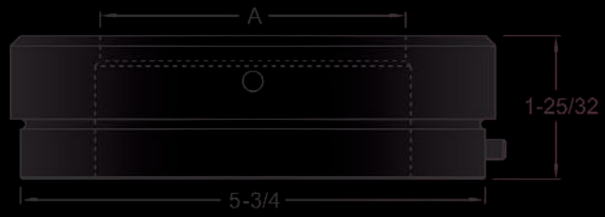

W. A. Whitney is a Trademark of MegaFab. Cleveland Punch and Die Company is not affiliated nor related to MegaFab. Cleveland Punch and Die Products are not endorsed or warranted by MegaFab.

36 TC PUNCHES & DIES

36 TC Punches & Dies

Cleveland Punch & Die provides four standard 36 TC punch styles designed to offer the best combination in strength and shear, allowing the full capabilities of the hole punching machine to be utilized.

Cleveland Punch & Die provides five standard 36 TC die styles designed to offer the best combination in strength and slug control.

STOCK PUNCHES & DIES ARE SHIPPED THE SAME DAY ORDERED!

****MADE TO ORDER SIZES CAN BE SHIPPED IN AS LITTLE AS 24 HOURS!***

INSERT PUNCH IN STOCK

Round hole sizes up to .750 diameter maximum. Insert punches are designed to be economical alternative for round hole sizes up to .750 maximum and must be used with a 36 TC insert punch holder.

STYLE 1 PUNCH*

Round and shaped hole sizes up to 1.719 maximum. Style 1 punches have a 2" shoulder and are provided with a flat face style punch end.

STYLE 2 PUNCH*

Round and shaped hole sizes from 1.720 to 2.469 maximum. Style 2 punches have a 2-1/2" shoulder and are provided with a 1/4" shear to reduce tonnage.

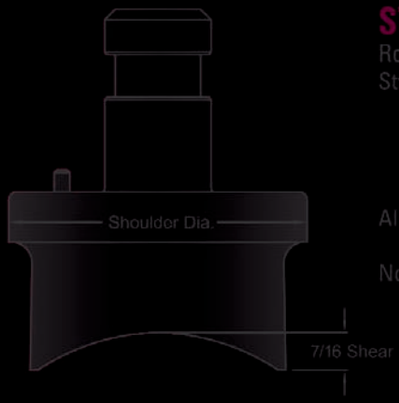

STYLE 3 PUNCH*

Round and shaped hole sizes from 2.470 to 5.000 maximum.

Style 3 punches have a:
- 3" shoulder for punch sizes 2.470 to 3.000
- 3-1/2" shoulder for punch sizes 3.001 to 3.469
- 4" shoulder for punch sizes 3.470 to 4.000
- 5" shoulder for punch sizes 4.001 to 5.000

All Style 3 punches are provided with a 7/16" shear to reduce tonnage.

Note: Pin locators depicted, are standard on shaped punches and dies only.

28XX DIES ~ IN STOCK

Use on 3400, 661 Machines.

Round and shaped holes.

28XX dies have a 1/4" die land, are designed to be used on material up to 1/2" thick and prevent slug stacking.

34XX DIES*

Use on 3500, 3600, 3700, 3700SST Machines.

Round and shaped holes.

34XX dies have a 1/4" die land, are designed to be used on material up to 3/8" thick and prevent slug stacking.

36XX DIES*

Use on 3400, 661 Machines.

Round holes only.

36XX dies have a 3/16" slug jamming die land to prevent slug pulling and are designed to be used on material up to 1/4" thick.

37XX DIES*

Use on 3400, 661 Machines.

Round holes only.

37XX dies have a 1/2" slug jamming die land to prevent slug pulling and are designed to be used on material 9/32" up to 5/8" thick.

38XX DIES*

Use on 3400, 661 Machines.

Shaped holes only.

38XX dies have a 1/2" die land and are designed to be used on material 9/32" up to 5/8" thick.

NOTE:
Minimum die clearance on Models 661 & 3400 is .012".

W. A. Whitney is a Trademark of MegaFab, Cleveland Punch and Die Company is not affiliated nor related to MegaFab. Cleveland Punch and Die Products are not endorsed or warranted by MegaFab.